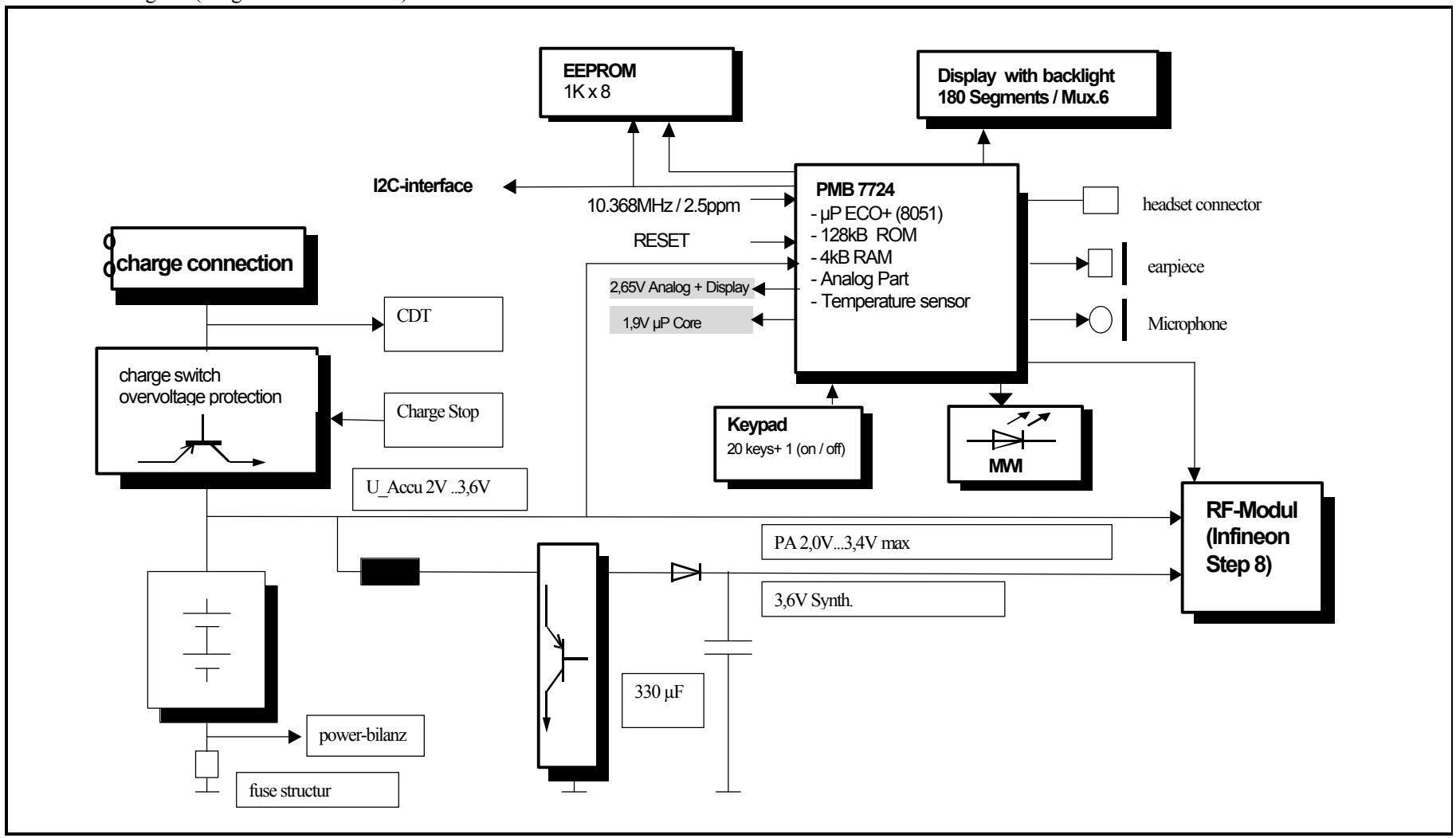G4000 block diagram ("Gigaset 4000 handset")