EXHIBIT D

Circuit Diagram

MXIC MX98715A DEMO BOARD REV: H

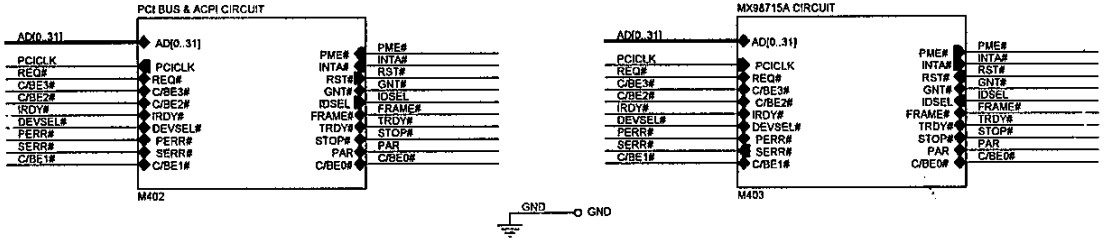

CIS TECNOLOGY INC.	
FILE : M401.SCH ENGINEER : AMY CHEN P/N :	
Title	ROOT
Size B	Document Number CIS-M400-PCI-Card-V2 — Rev 0
Date: Wednesday, July 21, 1999	Sheet 1 of 3

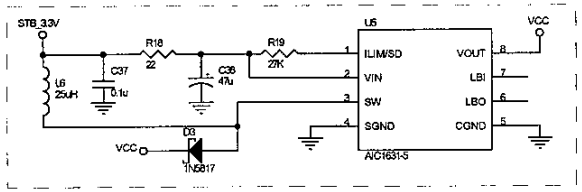

Reserve for PCI 2.2(3.3V standby power)

Option 1

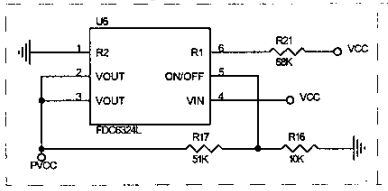

Option 2

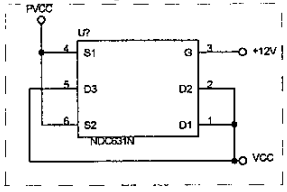

For ACPI function use (Two options, Default : FDC6324L)

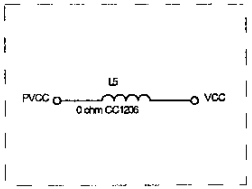

For non-ACPI function use.

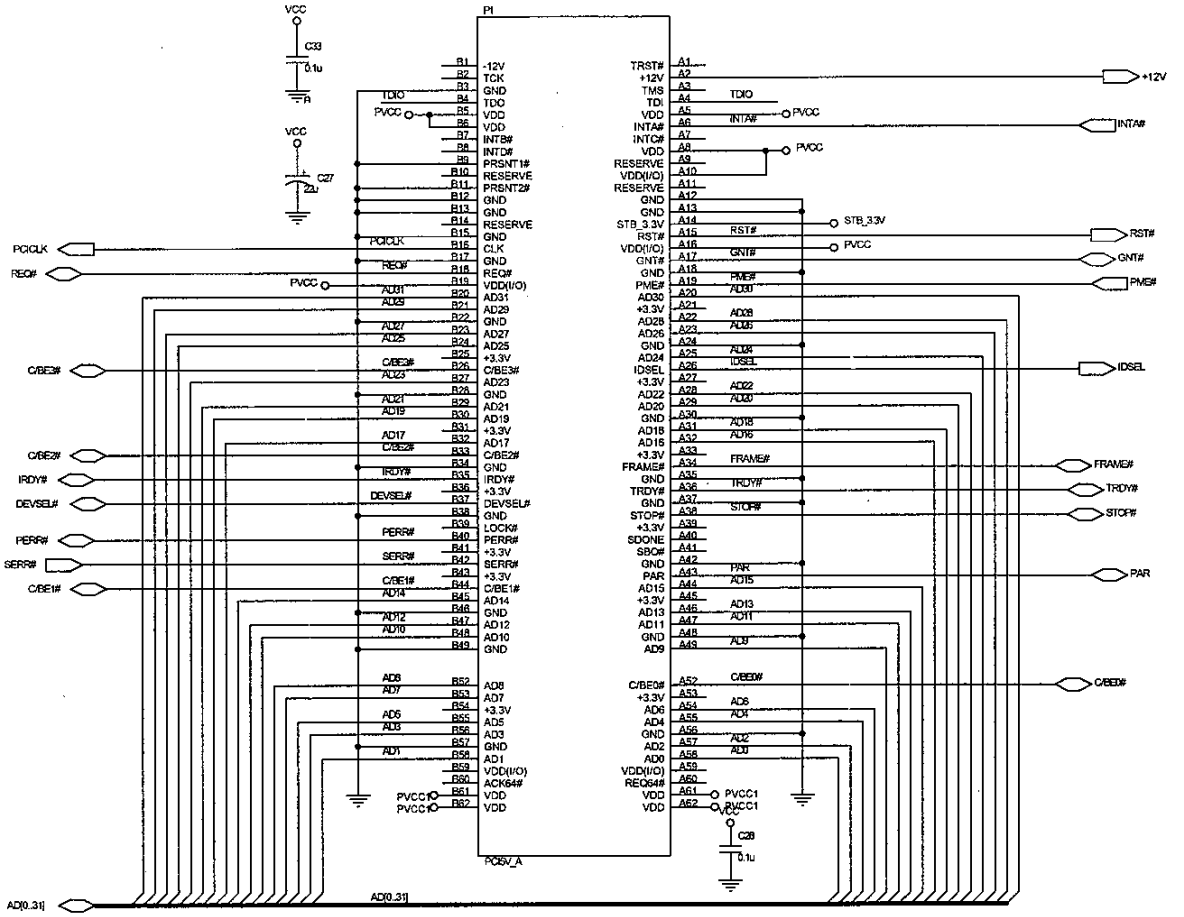

AIC1631-5

STEP-UP DC/DC CONVERTER
ANALOG INTEGRATIONS CORPORATION
TEL: 886-2-29141669 (Taipei)

FDC6324L Fairchild

FDC6324L Integrated Load Switch
Contact with NS's [illegible]
ARROW/ALLY, INC.
TEL: 886-2-27666399 (Taipei)
886-3-5788138 (Hsinchu)
www.fairchildsemi.com

F.B. Ferrit Bead

MAG.LAYERS MLB-321611-2700A-N2
TEL: 886-3-5517388 (Hsinchu)
www.maglayers.com.tw

NDC631N Fairchild

N-Channel Logic Level Enhancement Mode Field Effect Transistor
TEL:886-2-27688399 (Taipei)
886-3-5788138 (Hsinchu)

Note:
Gerber files list-

ART01.PHO	-- COMPONENT SIDE
ART04.PHO	-- SOLDER SIDE
SST0126.PHO	-- COMPONENT SIDE SILK SCREEN
DD0424.PHO	-- DRILL MAP
SM0128.PHO	-- COMPONENT SIDE MASK
SM0429.PHO	-- SOLDER SIDE MASK

MXIC MX98715A DEMO BOARD

MACRONIX INTERNATIONAL CO., LTD

Title: PCI Bus & ACPI Circuit

Size: B | Document Number: MX98715A DEMO BOARD | Rev: M

Date: Tuesday, August 17, 1999 | Sheet 1 of 2

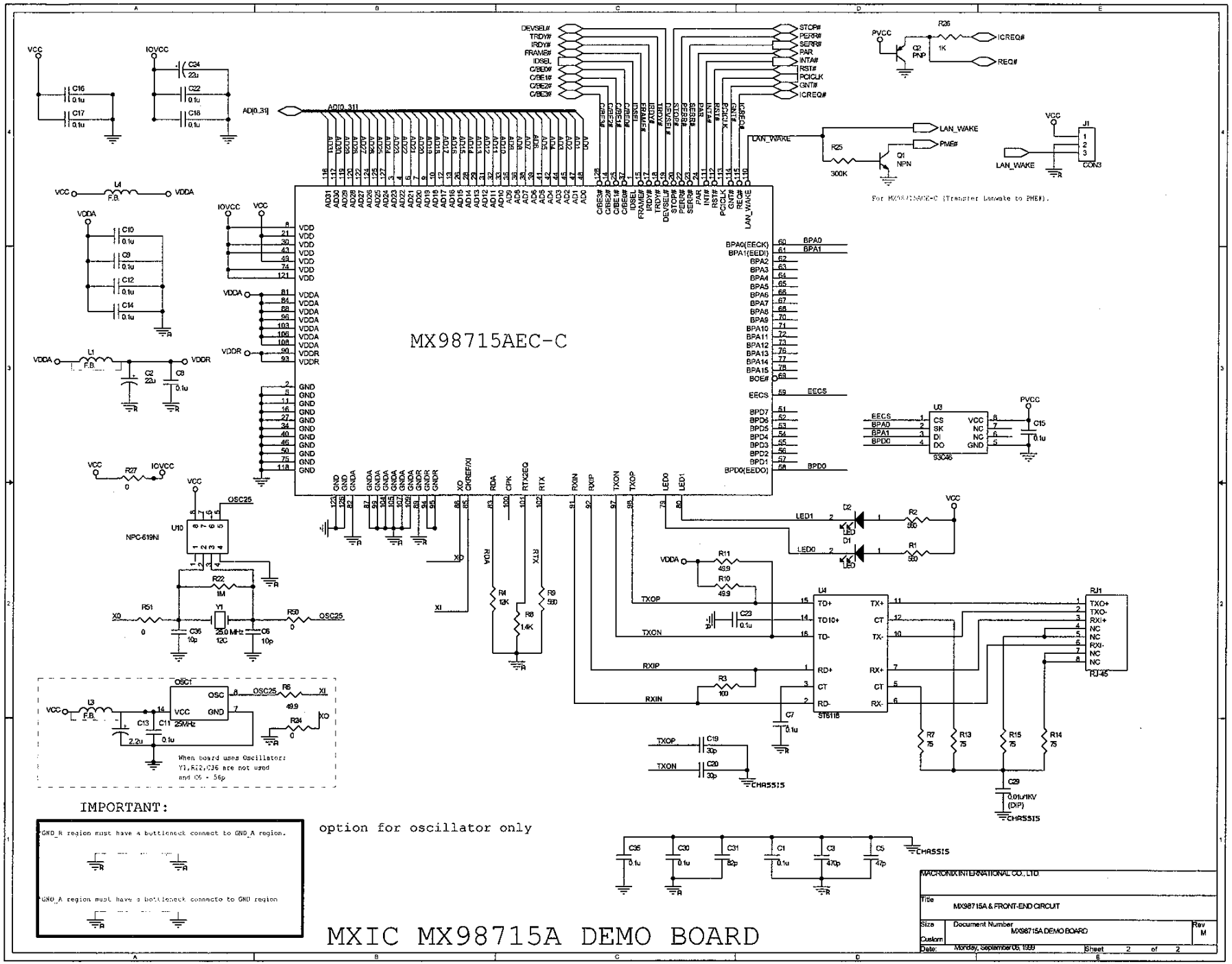
MX98715AEC-C
AD[0..31]
DEVSEL#
TRDY#
IRDY#
FRAME#
IDSEL
C/BE0#
C/BE1#
C/BE2#
C/BE3#
STOP#
PERR#
SERR#
PAR
INTA#
RST#
PCICLK
GNT#
ICREQ#
REQ#
LAN_WAKE
PME#
BPA0(EECK)
BPA1(EEDI)
BOE#
EECS
BPD0(EEDO)
LED1
LED0
TXOP
TXON
RXIP
RXIN
XO
XI
OSC25
VCC
IOVCC
VDDA
VDDR
PVCC
NPC-619NI
93C46
ST6118
RJ-45
TXO+
TXO-
RXI+
RXI-
NC
CHASSIS
When board uses Oscillator:
Y1,R22,C36 are not used
and C6 = 56p
option for oscillator only
IMPORTANT:
GND_R region must have a bottleneck connect to GND_A region.
GND_A region must have a bottleneck connecto to GND region
MXIC MX98715A DEMO BOARD
MACRONIX INTERNATIONAL CO., LTD.
Title
MX98715A & FRONT-END CIRCUIT
Size
Document Number
MX98715A DEMO BOARD
Rev
M
Custom
Date: Monday, September 06, 1999
Sheet 2 of 2