DELPHI DELCO ELECTRONICS SYSTEMS

KEY PRODUCT CHARACTERISTICS					
SAFETY/COMPLIANCE		FIT/FUNCTION			
S/C CHECKPOINTS		F/F CHECKPOINTS			
NO & TYPE	DESCRIPTION	RATIONALE	PTS	SHT	CONTROL PT
1 F/F			-	-	-

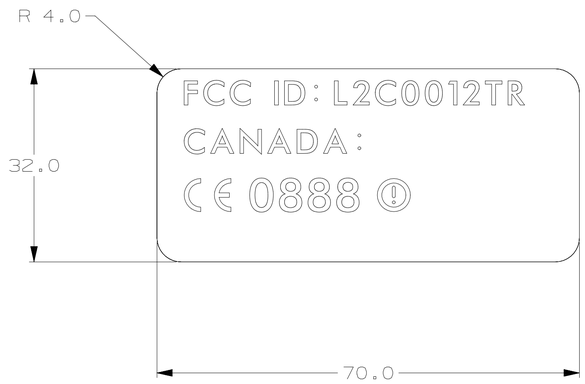

TYPICAL LABEL

PARTS MUST BE APPROVED BY DELPHI DELCO ELECTRONICS PRODUCT ENGINEERING.

LABEL WILL BE APPLIED TO A POLYPROPYLENE, NORYL, ABS, ALUMINUM, OR STEEL SUBSTRATE.

ALL DIMENSIONS FOR REFERENCE ONLY.

MUST MEET RELIABILITY AND PERFORMANCE REQUIREMENTS OF DELPHI D COMPONENT SPECIFICATION C-9000.

THE CE MARKING MUST HAVE A HEIGHT OF AT LEAST 5.0mm TALL.

ADVANCE PRINT FOR REFERENCE ONLY

FCC ID: L2C0012TR
CANADA:
CE 0888

LABEL SHOWN FULL SCALE

ZONE	DATE	SYM	REVISION RECORD	AUTHORITY	DR	AP
-	06FE01	A	(1) PRODUCTION RELEASE	153727	ML	JK

THE FOLLOWING ITEMS APPLY UNLESS OTHERWISE SPECIFIED

PERFECT FORM IS REQUIRED FOR FEATURES-OF-SIZE AT MMC. TRUE POSITION TOLERANCES AND RELATED DATUMS APPLY AT CONDITION OF SIZE INDICATED IN FEATURE CONTROL FRAME. OTHER GEOMETRIC TOLERANCES AND RELATED DATUMS APPLY RFS. SEPARATE TRUE POSITION CALLOUTS MAY BE GAGED SEPARATELY, REGARDLESS OF DATUM REFERENCE. SEE GM STANDARDS AND APPLICABLE DIVISIONAL STANDARDS FOR INTERPRETATION.

GEOMETRIC DRAWING SYMBOLS

FLATNESS	PROFILE OF A LINE	PARALLELISM
STRAIGHTNESS	PROFILE OF A SURFACE	CIRCULAR RUNOUT
ROUNDNESS	PERPENDICULARITY	TOTAL RUNOUT
CYLINDRICITY	ANGULARITY	SYMMETRY
TRUE POSITION	CONCENTRICITY	DIAMETRICAL

(M) MAXIMUM MATERIAL CONDITION (MMC) — (P) PROJECTED TOLERANCE ZONE
(L) LEAST MATERIAL CONDITION (LMC) — (T) TANGENT PLANE
(S) REGARDLESS OF FEATURE SIZE (RFS) — (F) FREE STATE
[X.X] BASIC DIMENSION — -A- DATUM FEATURE (Y14.5M-82)
DATUM TARGET — [A] DATUM FEATURE (Y14.5M-94)

DELPHI Automotive Systems

THIS DRAWING IS THE PROPERTY OF DELPHI DELCO ELECTRONICS SYSTEMS NO RIGHTS ARE GRANTED TO USE THIS DRAWING FOR ANY PURPOSE OTHER THAN THE FURNISHING OF SERVICES AND SUPPLIES TO DELPHI DELCO ELECTRONICS SYSTEMS

METRIC — mm

UNLESS OTHERWISE SPECIFIED DIMENSIONS ARE IN MILLIMETERS

TOLERANCES AS SPECIFIED

GD&T — ANSI Y14.5M-82/ASME Y14.5M-94 FOR INTERPRETATION

PDM — CHANGES ALLOWED ONLY BY PDM DOCUMENT PROCEDURES

UG — DO NOT SCALE — THIRD ANGLE PROJECTION

MANUAL REVISIONS NOT PERMITTED ON THIS DRAWING

LIBRARY - LB02325

SUBSTANCES OF CONCERN AND RECYCLED CONTENT PER DELPHI-A 1094900I

KEY PRODUCT CHARACTERISTICS			
SAFETY/ COMPLIANCE	TOTAL S/C 0	FIT/FUNCTION	TOTAL F/F 0
TOTAL ON DRAWING			0
LAST NUMBER USED			0

SCALE (THIS APPLIES WHEN PLOTTED AT FORMAT SIZE)	2:1
DWG DATE 06FE01	DES M. LUCKY
FIRST USED VW-A4	APR J. KRASNY
	APR
REFERENCE 12207653	APR
	APR
MATERIAL SPEC	SEE NOTE
DRAWING NAME	LABEL-CERTIFICATION
SIZE A1	PART NUMBER 12214412

8 7 6 5 4 3 2 1

FLINT, MI REV 19MR98
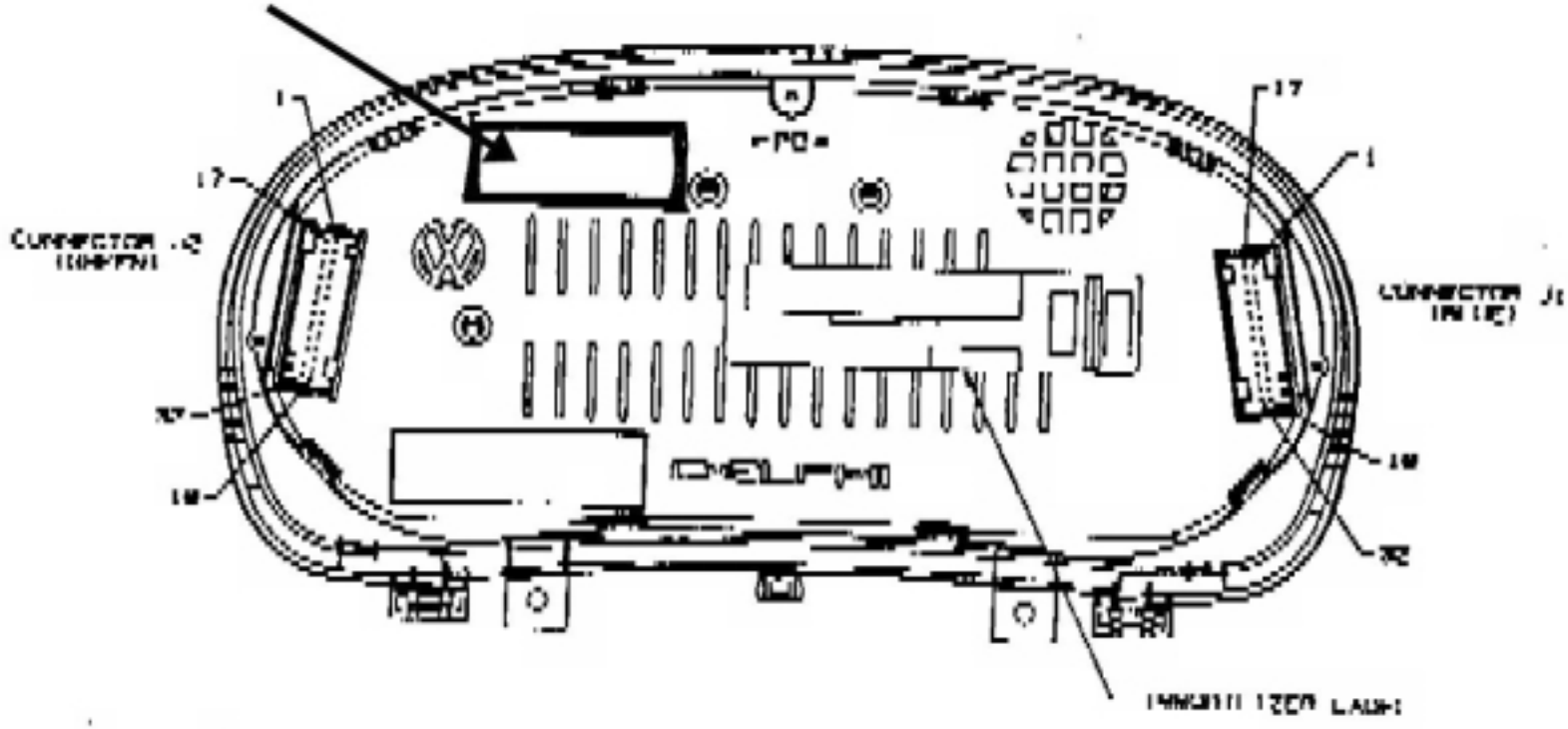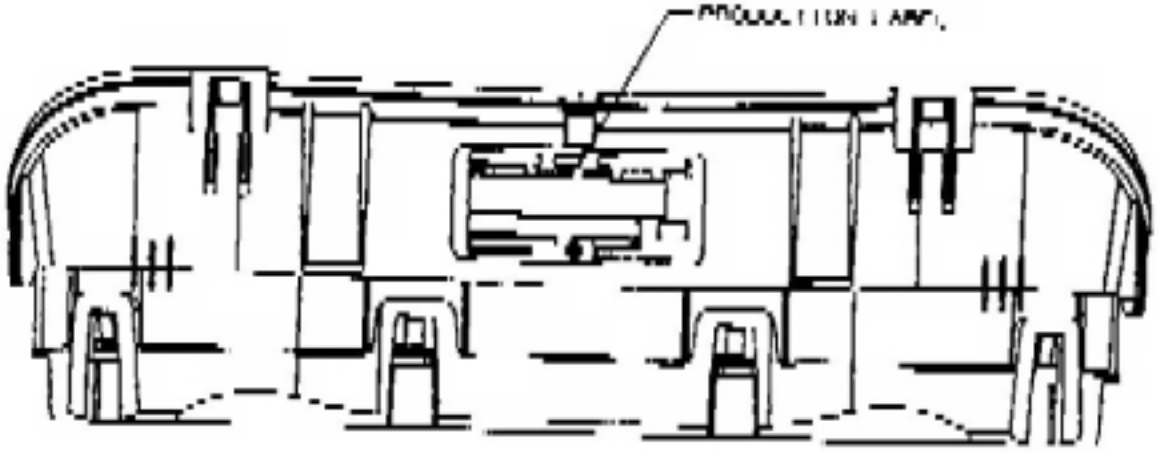
ID Label Location