DELCO ELECTRONICS SYSTEMS

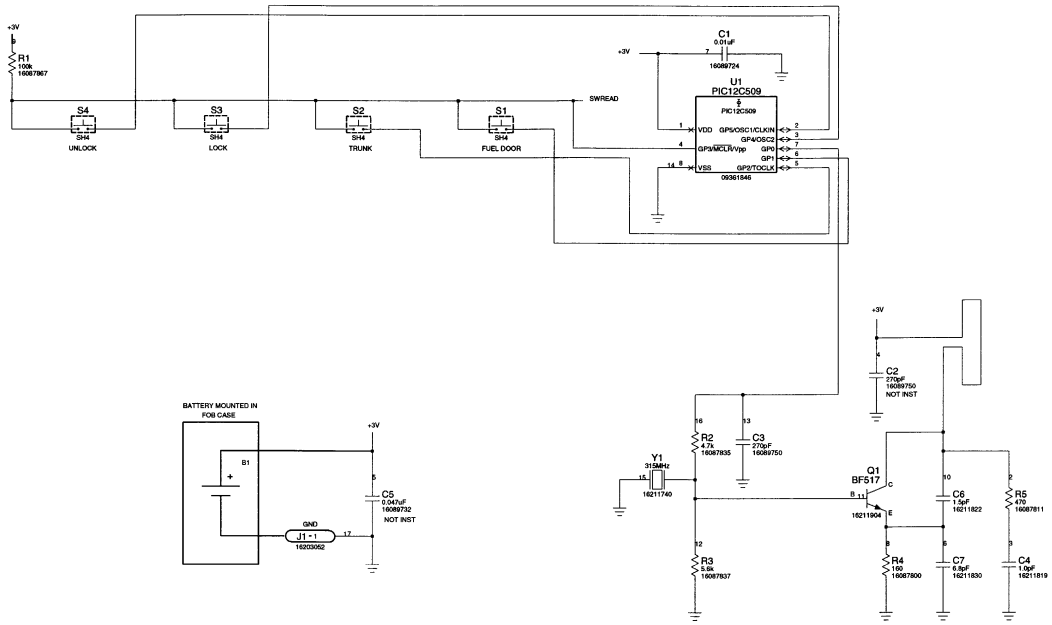

MFG1 DE CONFIDENTIAL

PART NO.	SHT	REV.
09361843	2 OF 2	A