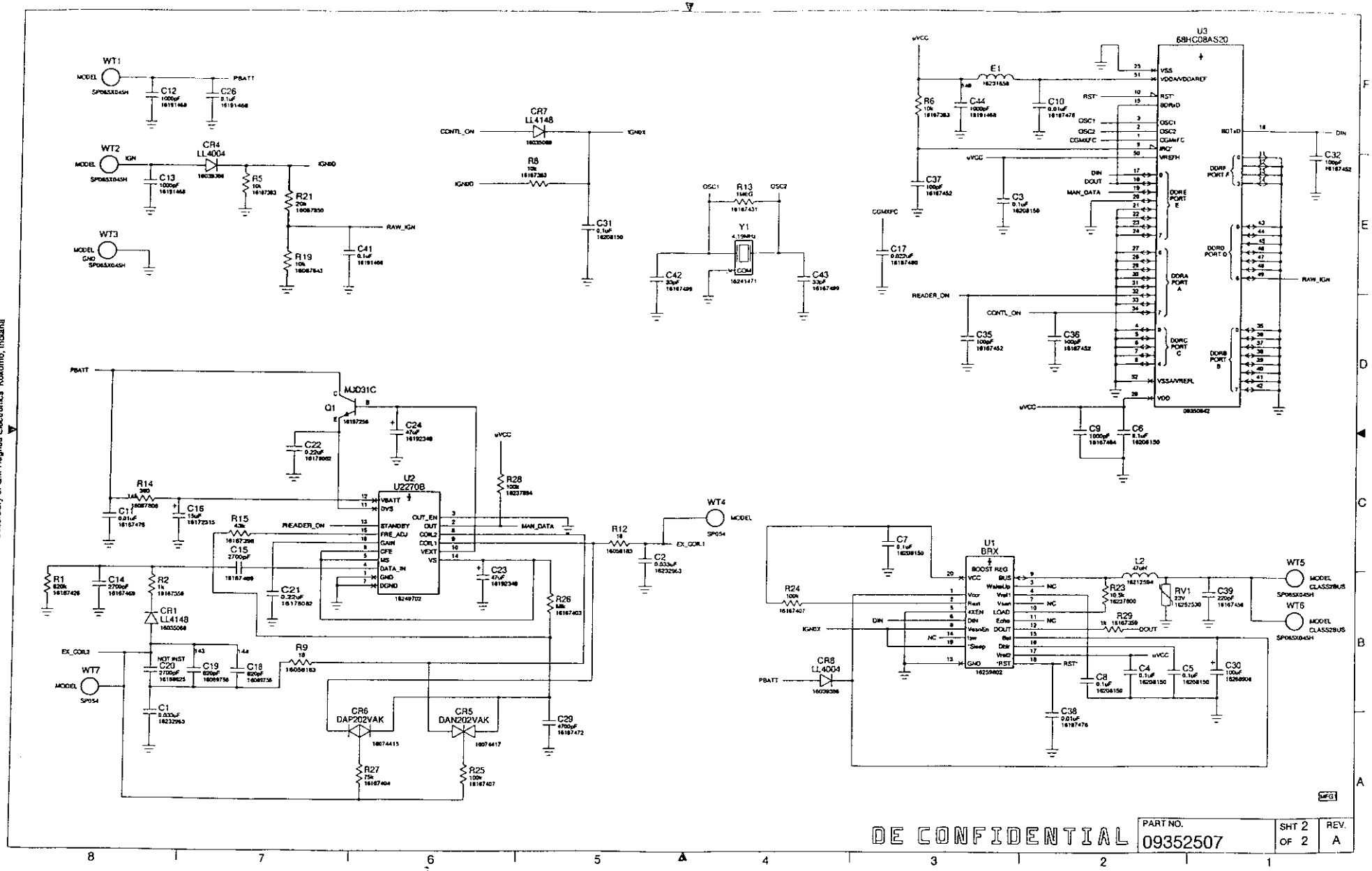
DELCO ELECTRONICS CORPORATION
Subsidiary of GM Hughes Electronics Kokomo, Indiana
U3
68HC08AS20
U2
U2270B
U1
BRX
WT1
WT2
WT3
WT4
WT5
WT6
WT7
Q1
MJD31C
CR1
LL4148
CR4
LL4004
CR5
DAN202VAK
CR6
DAP202VAK
CR7
LL4148
CR8
LL4004
Y1
4.19MHz
E1
L2
RV1
PBATT
uVCC
IGNDD
RAW_IGN
DE CONFIDENTIAL
PART NO.
09352507
SHT 2 OF 2
REV. A

EXHIBIT G

Page 4 of 4

U of Mich file 415031-938

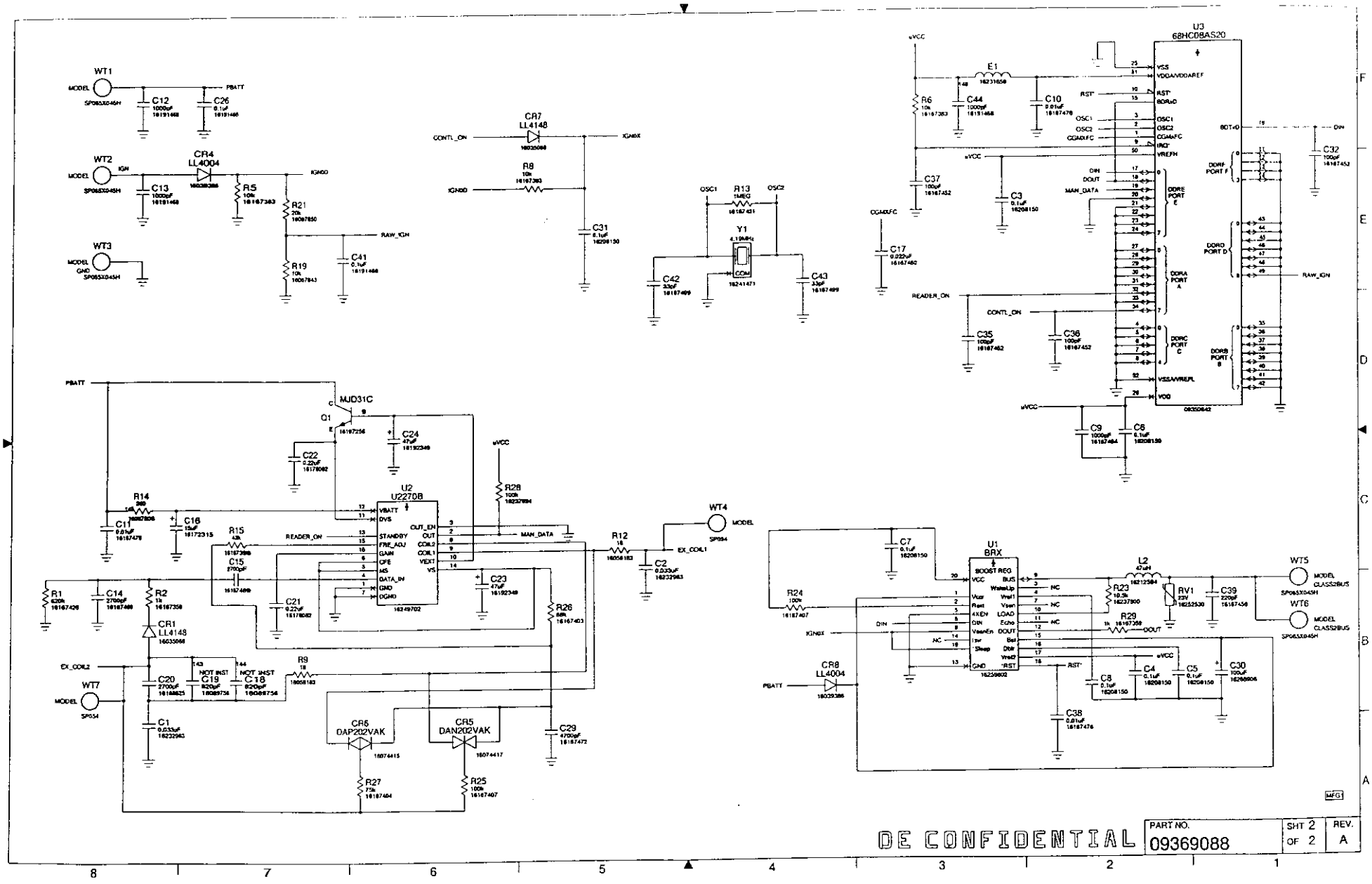

EXHIBIT H

Page 1 of 3

U of Mich file 415031-958

DELCO ELECTRONICS CORPORATION
Subsidiary of Gil Hughes Electronics Kokomo, Indiana

THIS ASSEMBLY SHALL CONSIST OF THE FOLLOWING. REF=REFERENCE, REQ=REF, OPTIONAL, OPT=OPTIONAL.			QTY
ITEM	PART NO	DESCRIPTION	
1	16266496	CIR BD-PASSKEY III	1
2	16255450	LABEL-ID	1
2	M-10378-26	SOLDER PASTE	REF
	16266498	SCHEMATIC DIAGRAM	REF

DATE	SYM	REVISION RECORD	AUTH	DR	AP
13AUG97	A	RELEASED-PRODUCTION	28798	EJT	
14JAN98	B	REVISED AND REDRAWN	127255	DL	RD
	C	REVISED AND REDRAWN	128101	EJT	KD

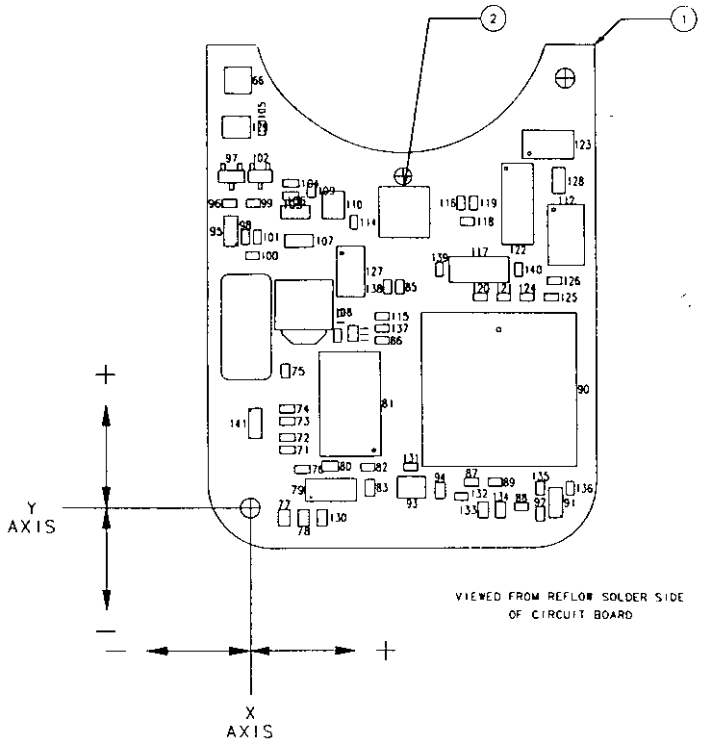

NOTES:

1. SMC'S SHALL BE SECURED TO THE REFLOW SOLDER SIDE OF THE CIRCUIT BOARD USING ITEM 2 PER PROCESS SPECIFICATION.
2. DEG ROT: 0, 90, 180 & 270 REFERS TO DEGREES ROTATION OF PIN #1. TRANSISTOR COLLECTOR, DIODE CATHODE, OR CAPACITOR (+) POSITIVE END. 0 EQUALS 3 O'CLOCK 90 EQUALS 12 O'CLOCK, ETC. NON-POLARIZED COMPONENTS ARE SPECIFIED AS 0 OR 180 FOR HORIZONTAL AND 90 OR 270 FOR VERTICAL.
3. THIS ASSEMBLY IS ELECTROSTATIC DISCHARGE (ESD) SENSITIVE.
4. XY COORDINATES ARE LOCATED WITHIN THE CHILD SCHEMATIC CDF FILE FOR THE INDIVIDUAL ASSEMBLY.
5. COMPONENTS MARKED OUT REPRESENT NOT INSTALLED COMPONETS.
6. COMPONETS LISTED ON SHEET 2 DO NOT REFLECT NOT INSTALLED COMPONENTS.

PASSKEY III 08
REDESIGN COLUMN

GEOMETRIC DRAWING SYMBOLS

METRIC

THIRD ANGLE PROJECTION

MENTOR COMPUTER GRAPHICS — MANUAL REVISIONS NOT PERMITTED ON THIS DRAWING

KEY PRODUCT CHARACTERISTICS			
SAFETY/ COMPLIANCE	TOTAL S/C 0	FIT/ FUNCTION	TOTAL F/F 0
TOTAL ON DRAWING			0
LAST NUMBER USED			0

13JAN97	LJTHOMAS
16266469	KODAVIS
N/A	N/A
N/A	N/A
N/A	N/A
N/A	N/A
N/A	N/A
N/A	N/A
CIR BD S/A-SM,RSS	
A1	16266499
SH 1 OF 2	

FILENAME: rorV3Rc
DESCRIPTION: TOP CHIP XY DATA

EXHIBIT H

Page 2 of 3

U of Mich file 415031-938

DELCO ELECTRONICS CORPORATION
Subsidiary of GM Hughes Electronics Kokomo, Indiana

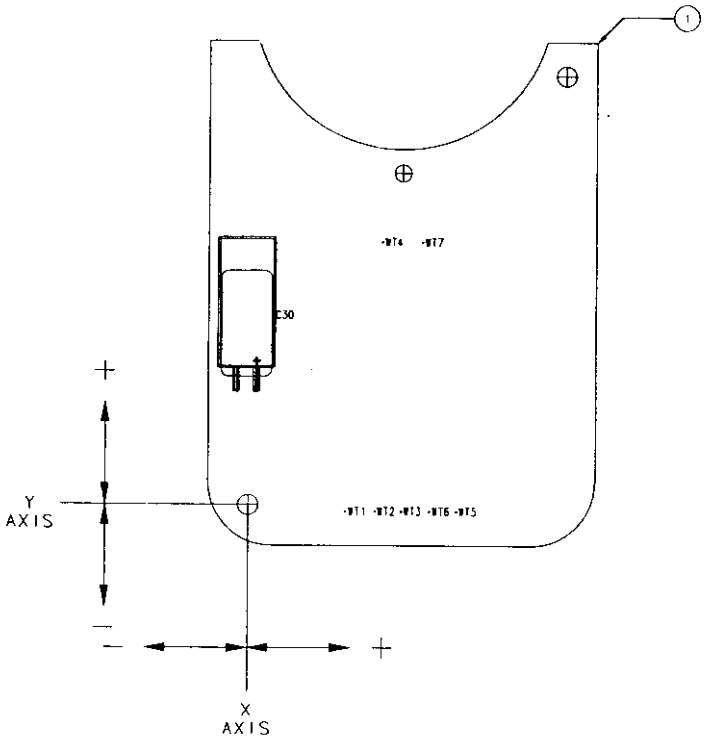

THIS ASSEMBLY SHALL CONSIST OF THE FOLLOWING:
REF=REFERENCE REQ=REF OPTIONAL OPT=OPTIONAL

ITEM	PART NO	DESCRIPTION	QTY
1	16266499	CIR BD S/A-SM,RSS	1
2	M-9340-4	SOLDER	REF
3	M-9334-19	SOLDER	REF
C30	16268908	CAP-ELR,100uF,35V	1
WT1	SP065X045H	SP065	1
WT2	SP065X045H	SP065	1
WT3	SP065X045H	SP065	1
WT4	SP054	WT	1
WT5	SP065X045H	SP065	1
WT6	SP065X045H	SP065	1
WT7	SP054	WT	1
	16266498	SCHEMATIC DIAGRAM	REF

DATE	REV	REVISION RECORD	MADE BY	DR	AP
15AUG97	A	RELEASED-PRODUCTION	28799	EJT	
14JAN98	B	REVISED AND REDRAWN	127255DN	MD	
	C	REVISED AND REDRAWN	128107EJT	MD	

PASSKEY III 08
REDESIGN COLUMN

GEOMETRIC DRAWING SYMBOLS

METRIC
THIRD ANGLE PROJECTION

DATE 17JAN97 DRAWN C.THOMAS
CHECKED KODAVIS
16266469
APPROVED N/A
N/A
N/A
N/A
N/A
N/A
N/A
N/A
CIR BD ASM-PASSKEY
A1 16266500 SH 1 OF 1

MENTOR COMPUTER GRAPHICS
MANUAL REVISIONS NOT PERMITTED ON THIS DRAWING

KEY PRODUCT CHARACTERISTICS

SAFETY/ COMPLIANCE	TOTAL S/C	FIT/ FUNCTION	TOTAL F/F
	0		0
TOTAL ON DRAWING			0
LAST NUMBER USED			0

FILENAME mor V2Rb
DESCRIPTION HAND PLACED XY DATA

NOTES:

1. THERE SHALL BE NO DELAMINATION, CRACKS OR BREAKS IN THE CIRCUIT BOARD AND NO BLISTERING OR SEPARATION OF THE COPPER CIRCUIT FROM THE BOARD.
2. ALL IC'S, NETWORKS, SOCKETS, DIODES, AND POLARIZED CAPACITORS ARE MOUNTED WITH PIN 1 OR POLARITY AS SHOWN.
3. SOLDER COMPONENTS SECURELY TO THE CIRCUIT BOARD WITH ITEM 2. TOUCH UP AS REQUIRED USING ITEM 3 SOLDERING TO BE PERFORMED PER PROCESS SPECIFICATION.
4. AFTER SOLDERING THERE SHALL BE NO SOLDER BRIDGES OR NEAR SHORTS
5. MAXIMUM LEAD PROTRUSION SHALL BE 2.5MM.
6. THE CIRCUIT BOARD ASSEMBLY RESISTIVITY SHALL BE GREATER THAN 1.0 MEGOHM-CM WHEN TESTED PER F-2037
7. SEE PERFORMANCE DOCUMENT FOR ELECTRICAL TESTS.
8. COMPONENTS CHIPPED, BROKEN OR DAMAGED ARE NOT ACCEPTABLE
9. THIS ASSEMBLY IS ELECTROSTATIC DISCHARGE (ESD) SENSITIVE.
10. COMPONENT PLACEMENT INFORMATION (HPA,MPA) IS LOCATED WITHIN THE CHILD SCHEMATIC CDF FILE FOR THE INDIVIDUAL ASSEMBLY.

QTY	CHIP NO	REF DES	PART NUMBER	DESCRIPTION
1	66	VF1	MF03000	Vias or Fiducial Top
1	71	R24	16167407	RES. SM. 63mW. 5%
1	72	C7	16208150	CAP-SM.0.1uF.16V
1	73	C4	16208150	CAP-SM.0.1uF.16V
1	74	C5	16208150	CAP-SM.0.1uF.16V
1	75	R29	16167359	Res.SM. 063W.5%.1K
1	76	R5	16167383	RES. SM. 63mW. 5%
1	77	C26	16191466	CAP.Cer.0.1uF.25V
1	78	C12	16191468	CAP.Cer.1000pF.50V
1	79	CR4	16039386	Diode. Rectifier. SM.1Amp
1	80	R21	16087721	RES.SM. 1W.1%
1	81	U1	16259802	IC-TRANSCEIVER. BRX
1	82	R19	16237894	RES-SM.100k.1/16W
1	83	C13	16191468	CAP.Cer.1000pF.50V
1	85	C8	16208150	CAP-SM.0.1uF.16V
1	86	R23	16237800	RES-SM.10.5k.1/16W
1	87	C6	16208150	CAP-SM.0.1uF.16V
1	88	R8	16167383	RES. SM. 63mW. 5%
1	89	C9	16187464	CAP-SM.1000pF.50V
1	90	U3	09350642	IC-HC08AS20-PROG.
1	91	CR7	16035068	Diode. Rectifier 100mA
1	92	C31	16208150	CAP-SM.0.1uF.16V
1	93	L2	16212594	INDUCTOR-47uH
1	94	RV1	16252530	VARISTOR-SM.100mJ
1	95	CR1	16035068	Diode. Rectifier 100mA
1	96	R27	16167404	RES. SM. 62mW. 5%
1	97	CR6	16074415	Diode. Signal
1	98	C14	16167469	CAP-SM.2700pF.50V
1	99	R25	16167407	RES. SM. 63mW. 5%
1	100	R2	16167359	Res.SM. 063W.5%.1K
1	101	R1	16167426	RES. SM. 620K. 0.063W
1	102	CR5	16074417	Diode. Signal SM
1	103	C18	16167463	CAP.Cer.820pF.50V
1	104	C19	16167463	CAP.Cer.820pF.50V
1	105	C2	16232963	CAP-SM.0.033UF.16V
1	106	C20	16188625	CAP.Cer.2700pF. 50V
1	107	C22	16176082	CAP.Cer.0.22uF.25V
1	108	Q1	16197256	XSTR-NPN.DPACK
1	109	C1	16232963	CAP-SM.0.033UF.16V
1	110	R9	16058183	RES. SM. 18. 0.25W. 5%
1	111	R14	16087808	RES.SM..1W.5%
1	112	C16	16172315	CAP. Tantalum. 15uF. 25V
1	113	C11	16167476	CAP-SM.0.01uF.50V
1	114	C15	16167469	CAP-SM.2700pF.50V
1	115	R6	16167383	RES. SM. 63mW. 5%
1	116	C29	16167472	CAP.Cer.4700pF.50V
1	117	Y1	16241471	RESONATOR-4.19MHZ
1	118	R26	16167403	RES. SM. 63mW. 5%
1	119	R15	16167398	RES. SM. 63mW. 5%
1	120	R13	16187431	RES-SM. .063W. 5%
1	121	C17	16167480	CAP-SM.0.022uF.25V
1	122	U2	16249702	IC-Immobilizer ASIC
1	123	C23	16192249	CAP-TAS.47uF.6V.20%
1	124	C10	16187476	CAP-SM.0.01uF.50V
1	125	C3	16208150	CAP-SM.0.1uF.16V
1	126	R28	16237894	RES-SM.100k.1/16W
1	127	C24	16192349	CAP-TAS.47uF.6V.20%
1	128	C21	16176082	CAP.Cer.0.22uF.25V
1	129	R12	16058183	RES. SM. 18. 0.25W. 5%
1	130	C41	16191466	CAP.Cer.0.1uF.25V
1	131	C32	16167452	CAP-SM.100pF.50V
1	132	C39	16167456	CAP.Cer.220pF.50V
1	133	E1	16231658	FERRITE BEAD-SM
1	134	C40	16208960	CAP-SM.0.1uF.50V
1	135	C35	16167452	CAP-SM.100pF.50V
1	136	C36	16167452	CAP-SM.100pF.50V
1	137	C37	16167452	CAP-SM.100pF.50V
1	138	C38	16167476	CAP-SM.0.01uF.50V
1	139	C42	16167499	CAP-SM.33pF.50V.5%
1	140	C43	16167499	CAP-SM.33pF.50V.5%
1	141	CR8	16035068	Diode. Rectifier 100mA

DATE	SYM	REVISION RECORD	WHO	CH	AP
15AUG97	A	RELEASED PRODUCTION			
18JUN98	B	REVISED AND REDRAWN			
	C	REVISED AND REDRAWN			

PASSKEY III 08
REDESIGN COLUMN

THE FOLLOWING APPLY UNLESS OTHERWISE SPECIFIED.
PERTAIN TO ALL REQUIREMENTS FOR FEATURE-OF-SIZE AT MMC.
TRUE POSITION TOLERANCE AND RELATED DATUMS APPLY AT CONDITION OF SIZE INDICATED IN FEATURE CONTROL FRAME.
OTHER GEOMETRIC TOLERANCES AND RELATED DATUMS APPLY AT RFS. DEPARTURE FROM POSITION CALLOUTS MAY BE CHECKED SEPARATELY, REGARDLESS OF DATUM REFERENCE. SEE QA STANDARDS AND APPLICABLE DIMENSIONAL STANDARDS FOR INTERPRETATION.

GEOMETRIC DRAWING SYMBOLS

FLAT		PROFILE OF A LINE		PARALLEL	
STRAIGHT		PERPENDICULAR		TRUE POSITION	
ROUND		PROFILE OF A SURFACE		CIRCULAR RUNOUT	
CYLINDRICAL		ANGULAR		TOTAL RUNOUT	
MAXIMUM MATERIAL CONDITION (MMC)				DIAMETER	
LEAST MATERIAL CONDITION (LMC)				BASIC DIMENSION	
REGARDLESS OF FEATURE SIZE (RFS)				DATUM TARGET	
PROJECTED TOLERANCE ZONE				DATUM FEATURE	

METRIC

THIRD ANGLE PROJECTION

UNLESS OTHERWISE SPECIFIED:
DIMENSIONS ARE IN MILLIMETERS
TOLERANCE ON:
TWO PLACE DECIMALS ± 0.5
THREE PLACE DECIMALS ± 0.13
ANGLES ± 1 DEGREE

DRN DATE 13JUN97	MAT'L NONE	CJTHOMAS
PART NUMBER 16266469		KOOAYIS
REFERENCE N/A		N/A
		N/A
		N/A
		N/A
		N/A
		N/A
MATERIAL SPEC N/A		
NAME CIR 8D S/A-SM.RSS		
SIZE A1	PART NO 16266499	SH 2 OF 2

MENTOR COMPUTER GRAPHICS
MANUAL REVISIONS NOT PERMITTED ON THIS DRAWING

KEY PRODUCT CHARACTERISTICS

SAFETY/ COMPLIANCE	TOTAL S/C 0	FIT/ FUNCTION	TOTAL F/F 0
TOTAL ON DRAWING			0
LAST NUMBER USED			0

FILENAME	DESCRIPTION
rorV3Rc	TOP CHIP XY DATA

Subsidiary of GM Hughes Electronics Kokomo, Indiana