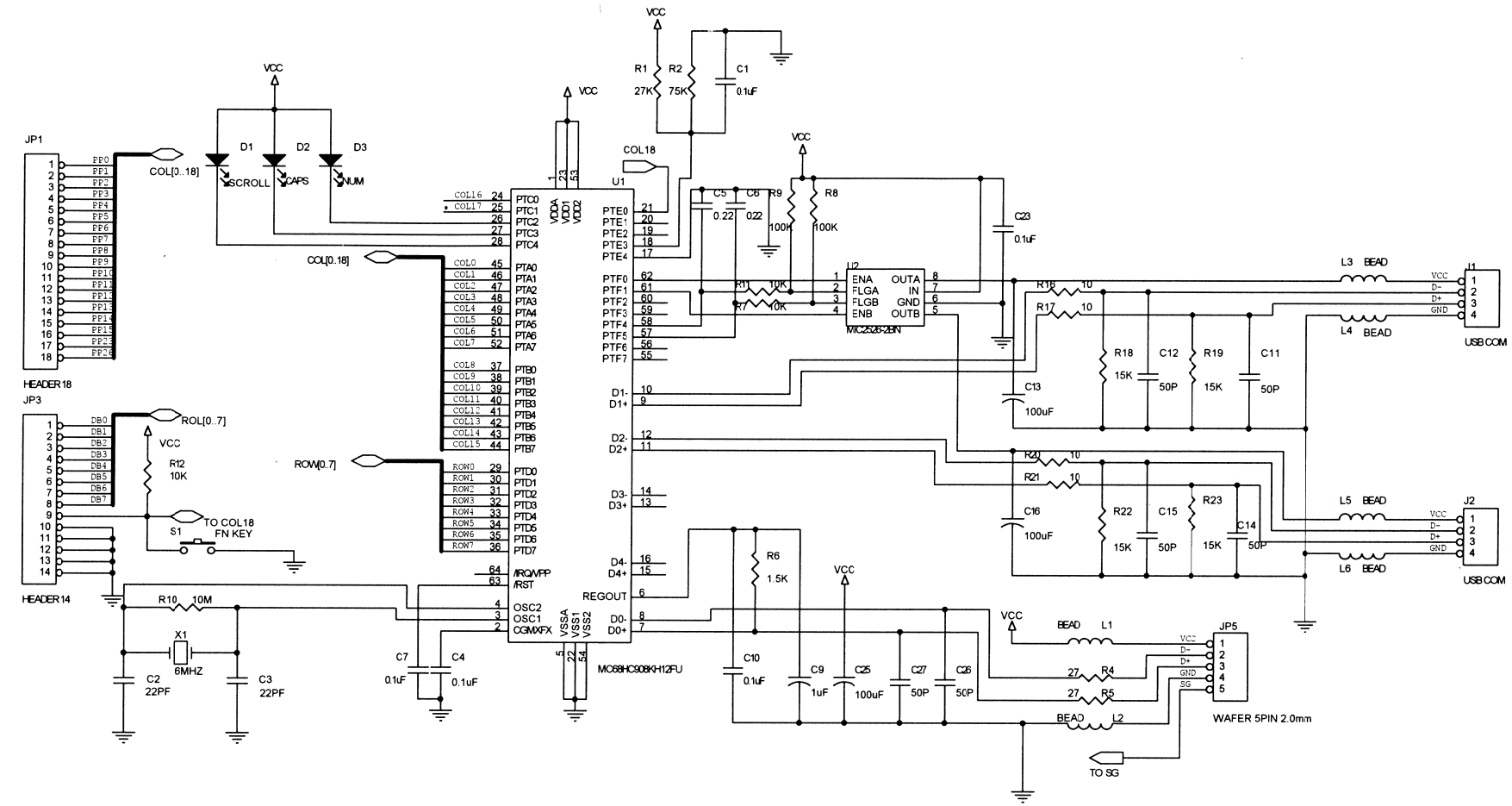

vender id : 060b
product id : 6001
manufacture : solid year
product : solid year usb hub keyboard

Title	ACK-600H USB HUB KEYBOARD	
Size B	Document Number	Rev 1.0
Date: Thursday, August 05, 1999	Sheet 1 of 1	