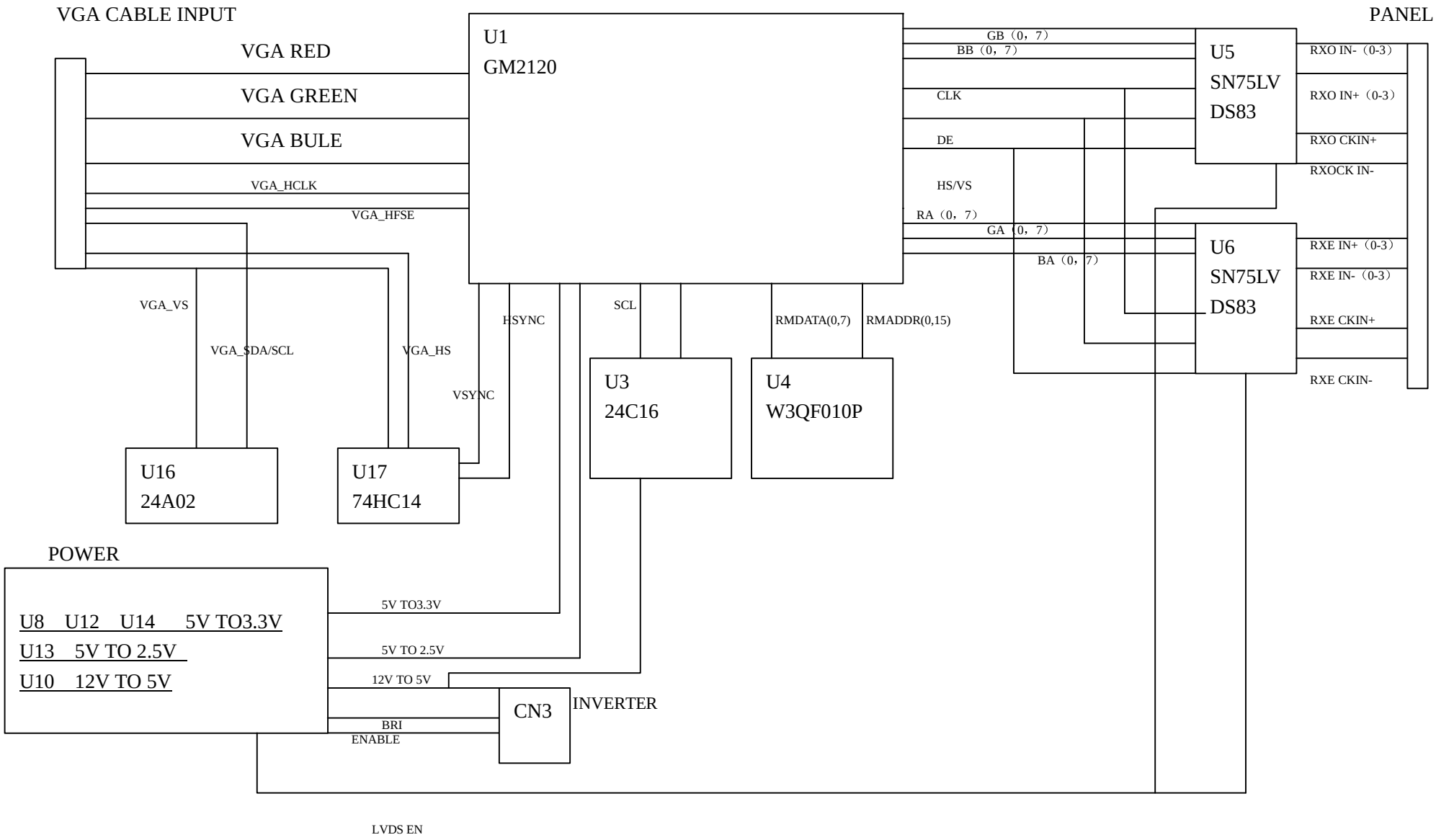

NV721C BLOCK DIAGRAM