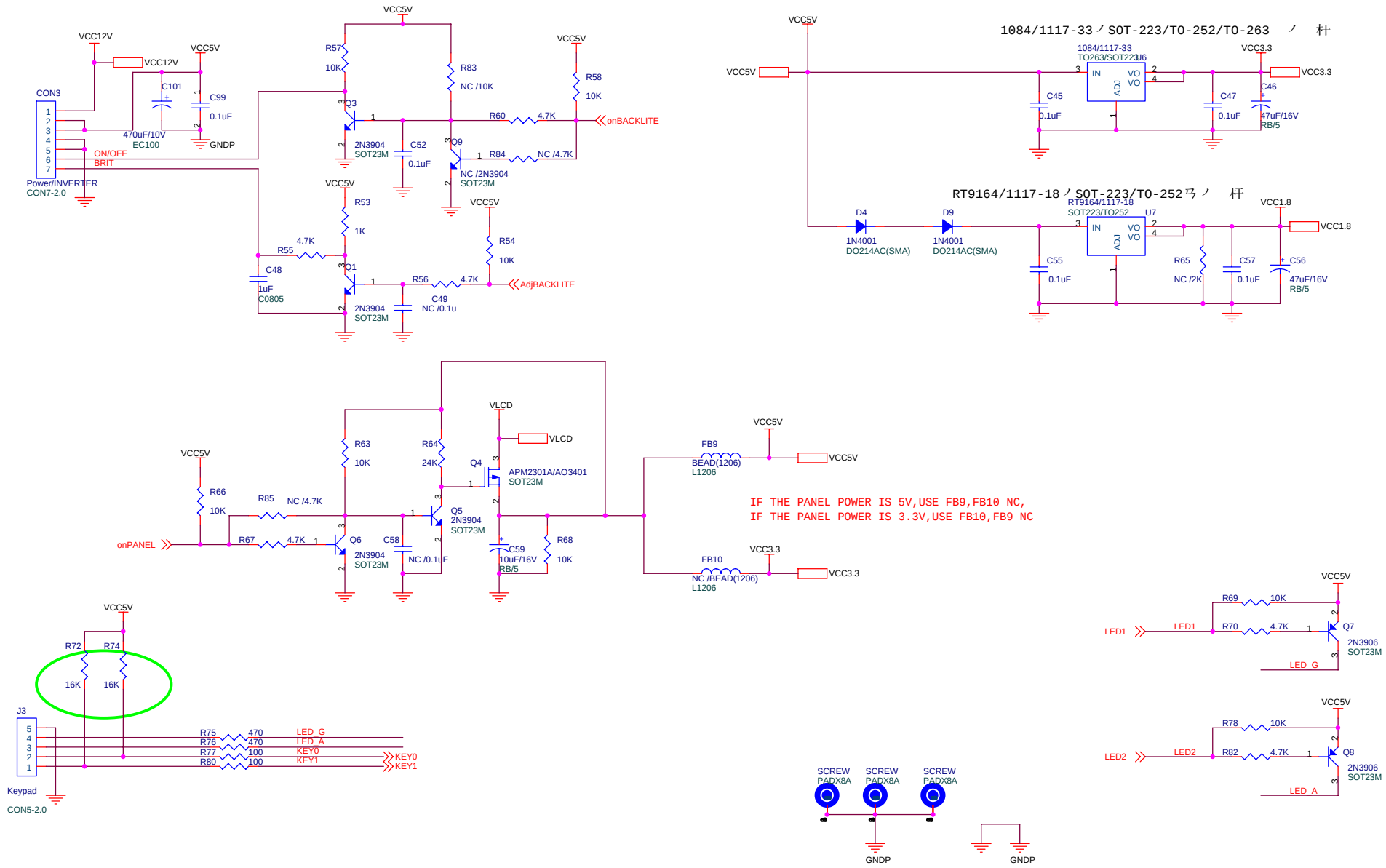

ULTRA SOURCE TECHNOLOGY CORP.
12/F.,FIYTA Tech.Building, 1 Road South High-tech., Nanshan District,Shenzhen(518053)

Title: GW_TSUMxxAL_For_Gateway_Ver1.10		Design by: Erwin.Mu
Size: A3	Document Number: DC-DC Power	Rev: 1.10
Date: Thursday, February 09, 2006	Page: 1 of 3	