Rev	Date	ECO	Change Description	Initials

APPROVALS:

ENG: _____ Date: _____

MFG: _____ Date: _____

QA: _____ Date: _____

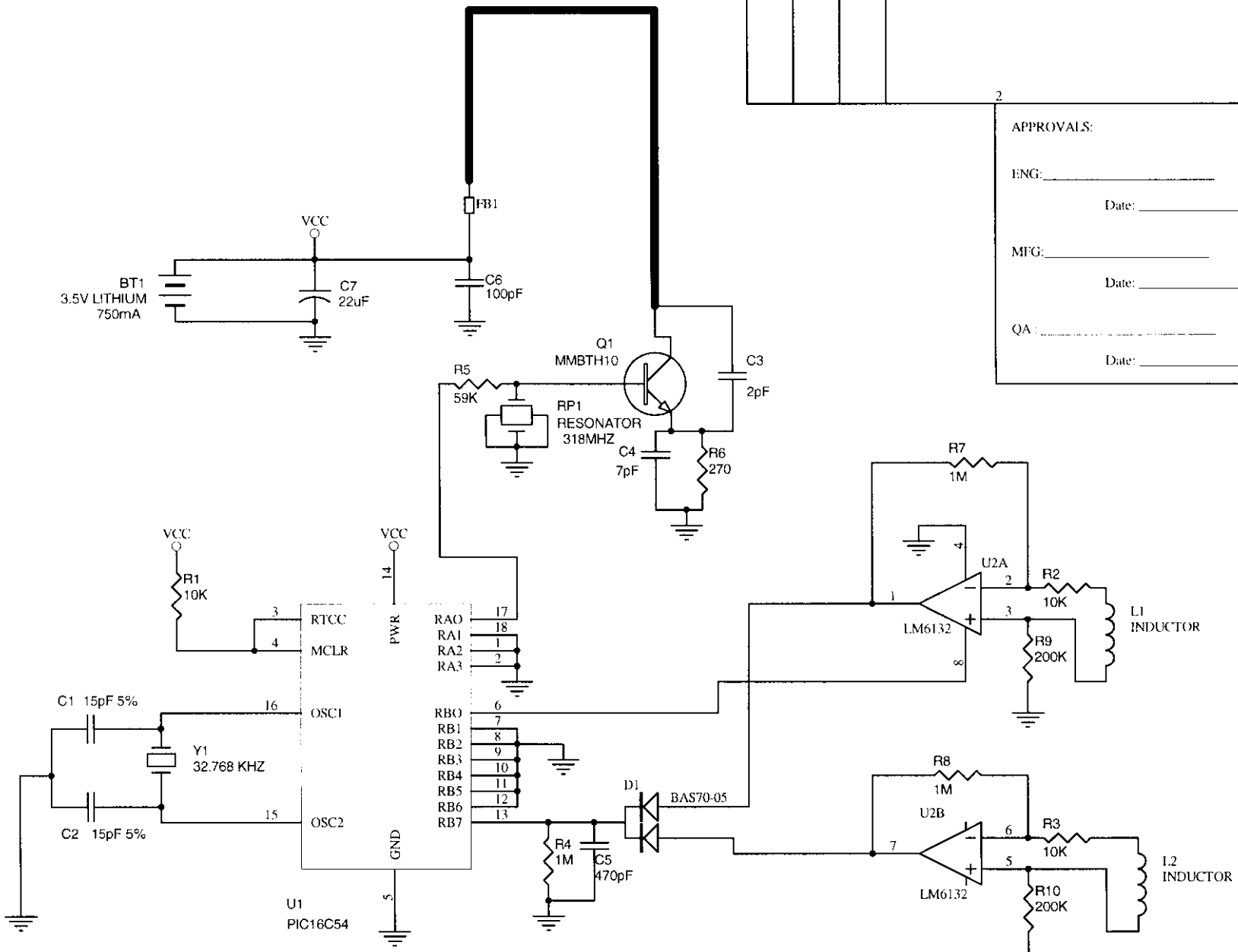

This print and the design therein represented are the property of RF Technologies, Incorporated and may not be used in any manner detrimental to it's interest. This print has been issued with the understanding that it will not be reproduced, that no disclosure of it's contents will be made to others, that it will not be used for manufacture for others, and it will be returned upon request.

Title: UHF/VLF TRANSPONDER

Size: A | Number: | Revision: B

File: Q:\INVENTOR\SCH\08000092.SCH | Date: 15-Apr-1998 Time: 09:05:58 | Sheet1 of 1

RF Technologies, Inc.
3125 N 126th St
Brookfield WI 53005
(414) 790-1771
FAX (414)790-1784

RF Technologies, Inc.
ENGINEERING

RXU-1XAT