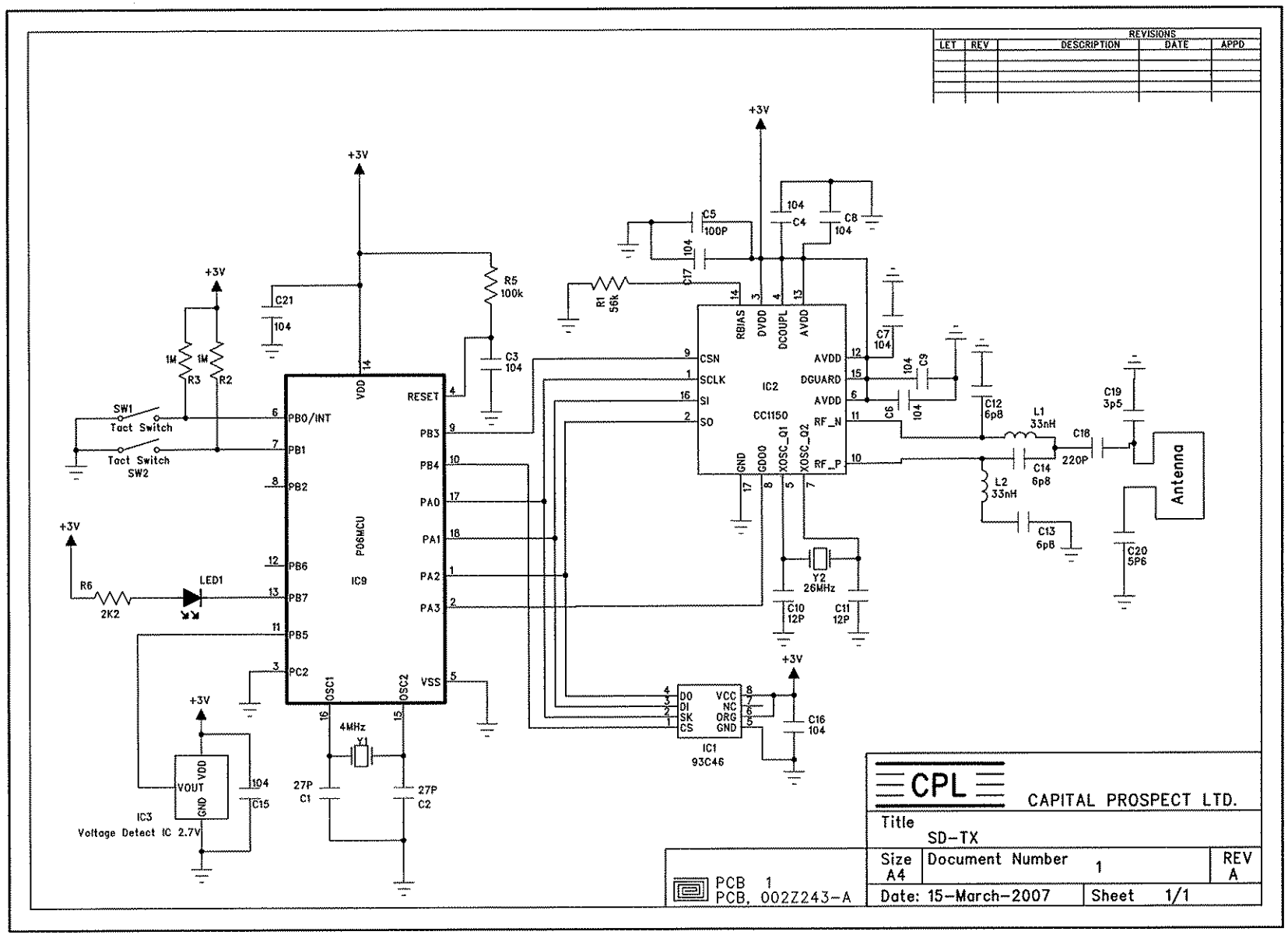
REVISIONS
LET REV DESCRIPTION DATE APPD
+3V
C21 104
R5 100k
C3 104
1M R3
1M R2
SW1 Tact Switch
Tact Switch SW2
PB0/INT
PB1
PB2
PB6
PB7
PB5
PC2
VDD
RESET
PB3
PB4
PA0
PA1
PA2
PA3
VSS
OSC1
OSC2
POSMCU
IC9
R6 2K2
LED1
4MHz Y1
27P C1
27P C2
VOUT VDD GND
IC3
Voltage Detect IC 2.7V
C15 104
C5 100P
104 C4
C8 104
C17 104
R1 56k
RBIAS DVDD DCOUPL AVDD
CSN
SCLK
SI
SO
IC2
CC1150
AVDD
DGUARD
RF_N
RF_P
GND GDDO XOSC_Q1 XOSC_Q2
C7 104
C9 104
C6 104
C12 6p8
L1 33nH
C18 220P
C14 6p8
L2 33nH
C13 6p8
C19 3p5
C20 5P6
Antenna
Y2 26MHz
C10 12P
C11 12P
DO DI SK CS
VCC NC ORG GND
IC1
93C46
C16 104
CPL
CAPITAL PROSPECT LTD.
Title
SD-TX
Size A4
Document Number 1
REV A
Date: 15-March-2007
Sheet 1/1
PCB 1
PCB, 002Z243-A