REVISIONS					
REV	ACTION	DRAWN	CHECKED	APPRV'D	DATE
AA	R99038	M.Xie	S. SMITH	M.Xie	1/17/00
AB	E10151AD	M.Xie	S. SMITH	M.Xie	3/30/00

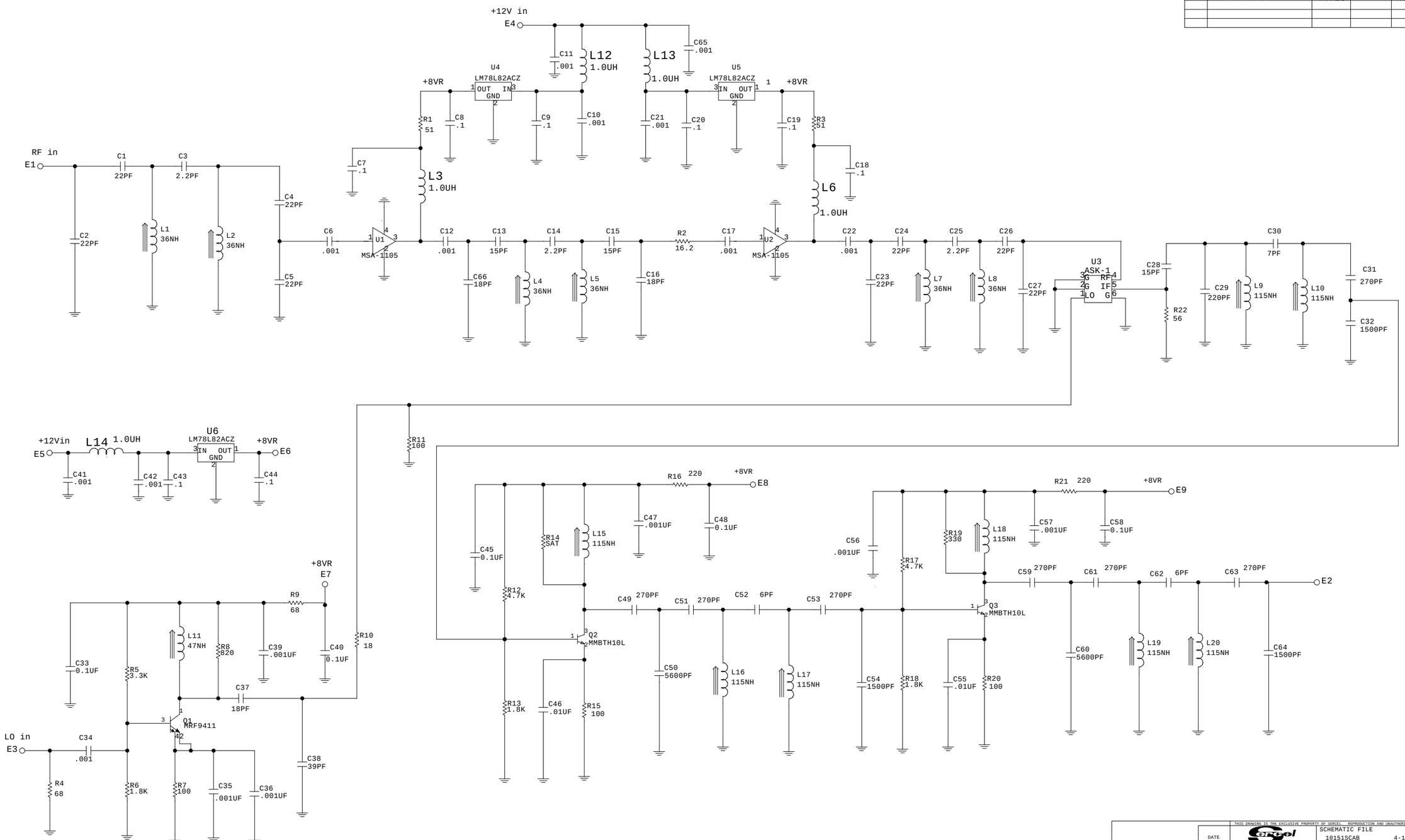

THIS DRAWING IS THE EXCLUSIVE PROPERTY OF SERCEL. REPRODUCTION AND UNAUTHORIZED USE ARE PROHIBITED.

	DATE
DESIGN MICHAEL XIE	4/26/99
DRAWN MICHAEL XIE	1/17/00
CHECKED SCOTT SMITH	3/7/00
APPROVED MICHAEL XIE	3/7/00

SCHEMATIC FILE 10151SCAB 4-18-2000_15:07

TITLE

REM RCVR, INPUT AMPLIFIER 1ST MIXER/1ST IF

© SERCEL INC. 1999

SCALE	SIZE	DOC TYPE	DRAWING NO.	REV	SHEET
NA	D	SC	2010151	AB	1 / 1

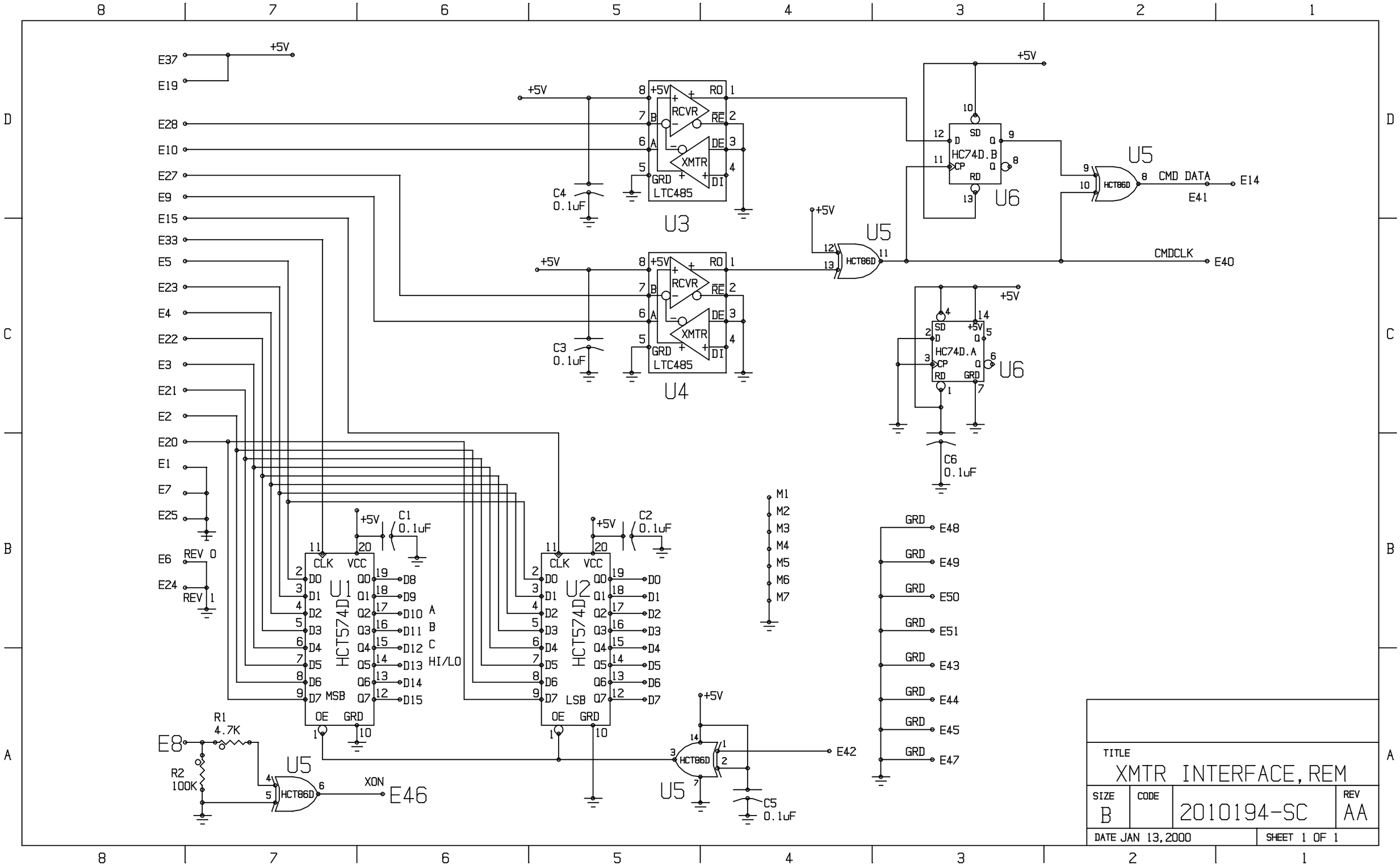

TITLE
XMTR INTERFACE, REM

SIZE	CODE		REV
B		2010194-SC	AA

DATE JAN 13, 2000 | SHEET 1 OF 1

REVISIONS					
REV	ACTION	DRAWN	CHECKED	APPRV'D	DATE
AA	R99038	D. BELL	S. SMITH	M. XIE	3/6/00
AB	E10116AC	M. XIE	S. SMITH	M. XIE	3/30/00

NOTE: UNLESS OTHERWISE SPECIFIED

1. U6 & U7 ARE DRAWN USING NEGATIVE LOGIC
2. ALL RESISTORS ARE IN OHMS
3. ALL CAPACITORS ARE IN MICROFARADS
4. C20 IS NOT LOADED
5. E38-40 & E44 ARE NOT USED
6. C15 & C21 ARE TRIMMED WITH 1PF TO 4PF

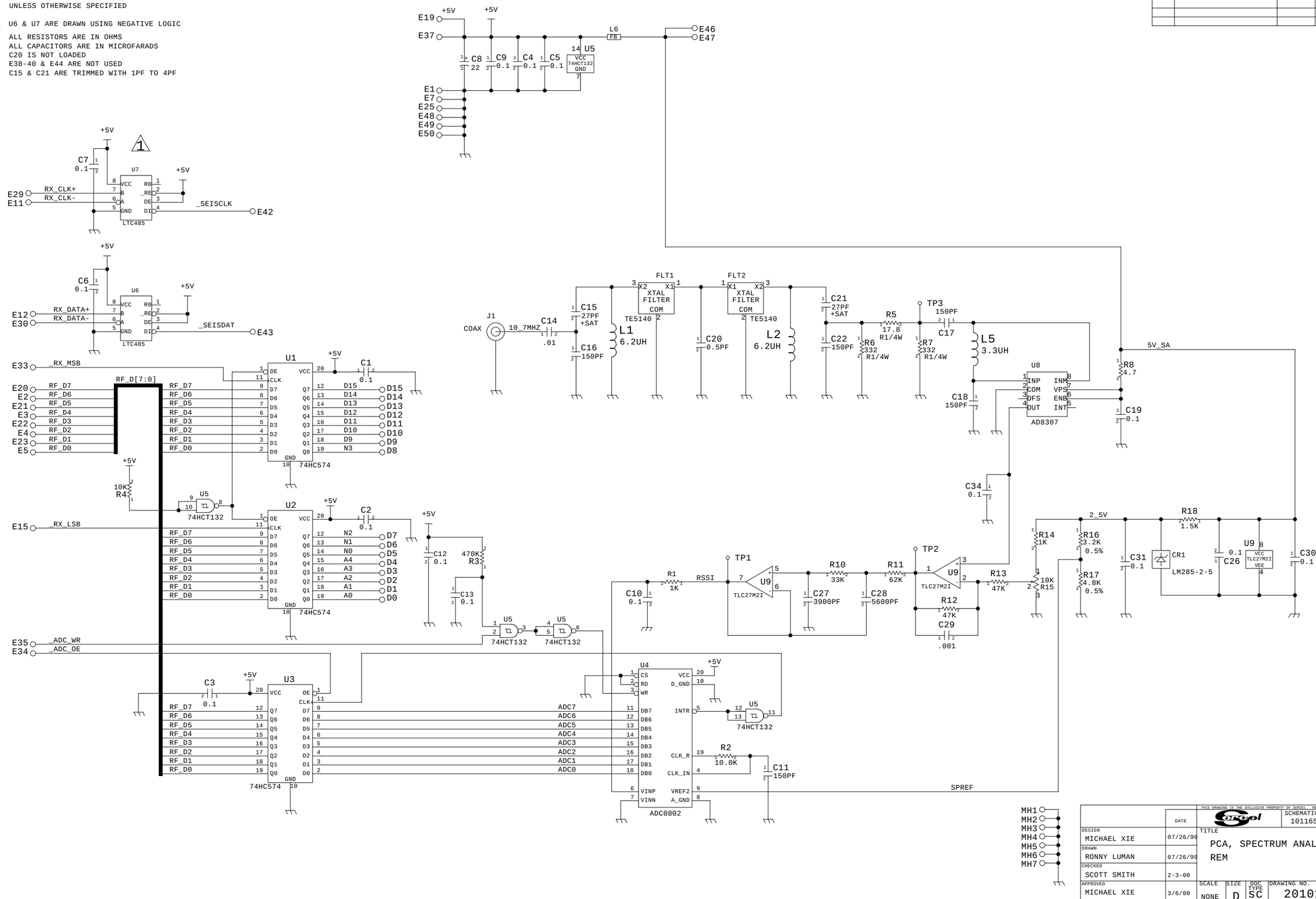

	DATE	
DESIGN MICHAEL XIE	07/26/99	
DRAWN RONNY LUMAN	07/26/99	
CHECKED SCOTT SMITH	2-3-00	
APPROVED MICHAEL XIE	3/6/00	

THIS DRAWING IS THE EXCLUSIVE PROPERTY OF SERCEL. REPRODUCTION AND UNAUTHORIZED USE ARE PROHIBITED.

SCHEMATIC FILE 10116SCAB 4-18-2000_14:20

TITLE PCA, SPECTRUM ANALY / INTRF BOARD REM

© SERCEL INC. 1999

SCALE	SIZE	DOC TYPE	DRAWING NO.	REV	SHEET
NONE	D	SC	2010116	AB	1 / 1

REVISIONS					
REV	ACTION	DRAWN	CHECKED	APPRV'D	DATE
AA	R99036	D. BELL	S. SMITH	DB	1/10/00

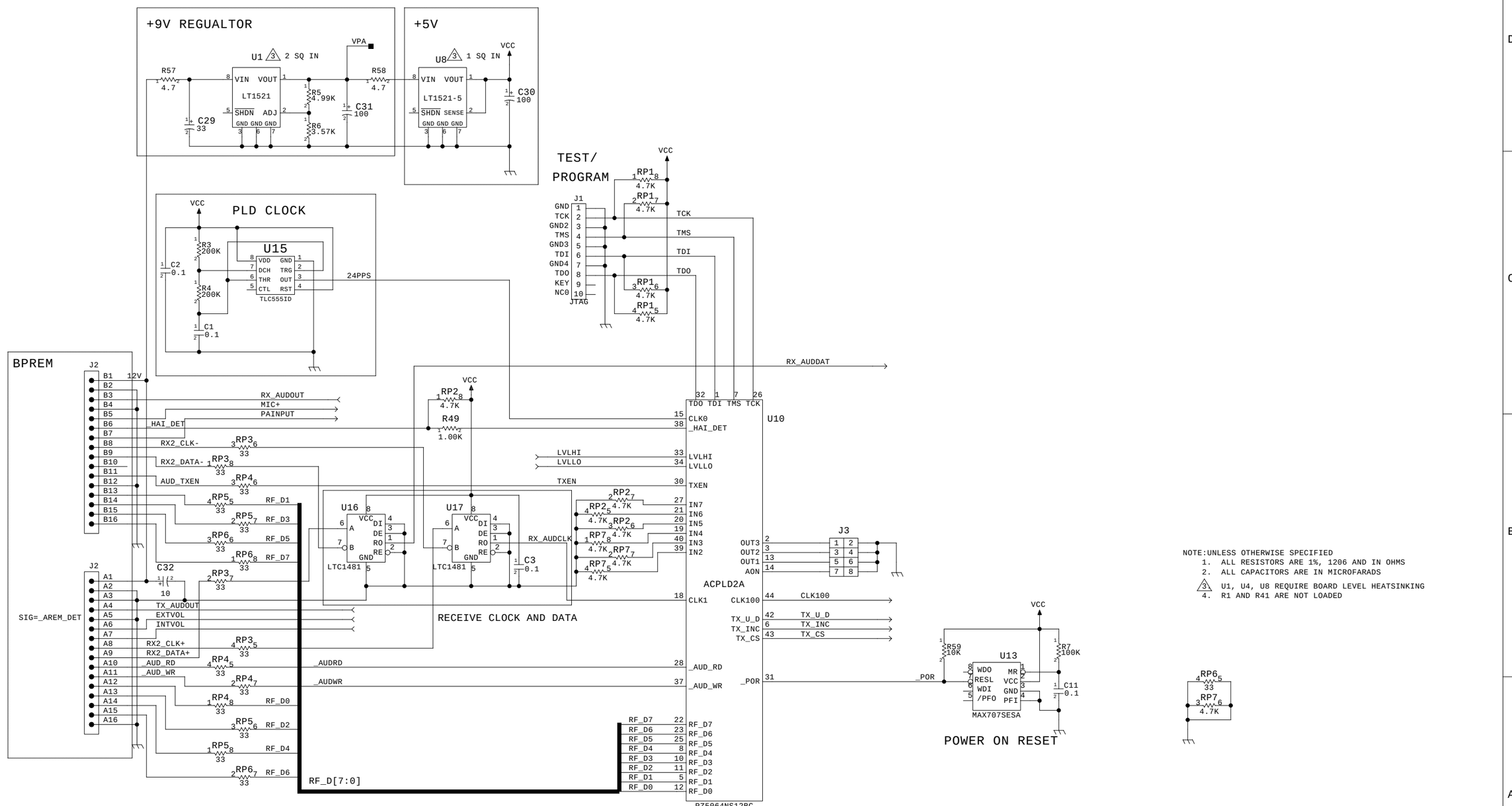

THIS DRAWING IS THE EXCLUSIVE PROPERTY OF SERCEL. REPRODUCTION AND UNAUTHORIZED USE ARE PROHIBITED.

	DATE		
		SCHEMATIC FILE 10147SCAA	4-18-2000_11:16
DESIGN D. BELL	3-31-99	TITLE PCA, AUDIO BOARD REM	
DRAWN			
CHECKED SCOTT SMITH	9-20-99		© SERCEL INC. 1999
APPROVED D. BELL	9-21-99	SCALE NONE / SIZE D / DOC TYPE SC / DRAWING NO. 2010147	REV AA / SHEET 1/2

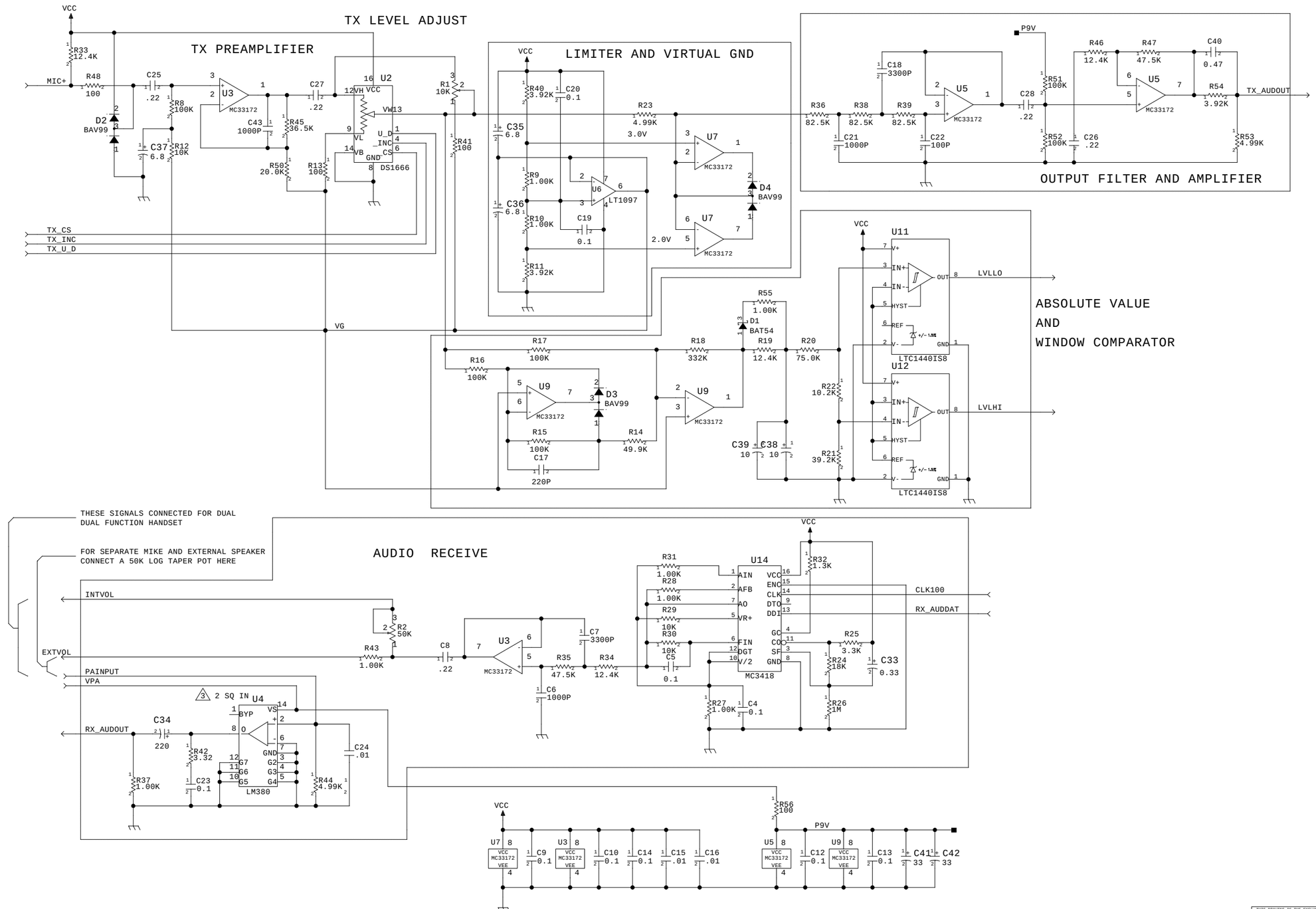

THIS DRAWING IS THE EXCLUSIVE PROPERTY OF SERCEL. REPRODUCTION AND UNAUTHORIZED USE ARE PROHIBITED.

SCHEMATIC FILE 10147SCAA1-17-2000_10:05

TITLE PCA, AUDIO BOARD, REM

© SERCEL INC. 1999

SCALE	SIZE	DOC TYPE	DRAWING NO.	REV	SHEET
NONE	D	SC	2010147	AA	2 / 2

NOTES:

⚠1 MOUNTING TERMINAL (ITEM 30) ON Q3 TO CONTACT U1.

REVISION					
REV	ACTION	DRAWN	CHECKED	APPROVED	DATE
AA	R99021	C. TRAN	S. SMITH	M. XIE	10/5/99
AB	E10144AB	C. TRAN	S. SMITH	M. XIE	10/15/99
AC	E10144AC	C. TRAN	S. SMITH	M. EATON	1/26/00

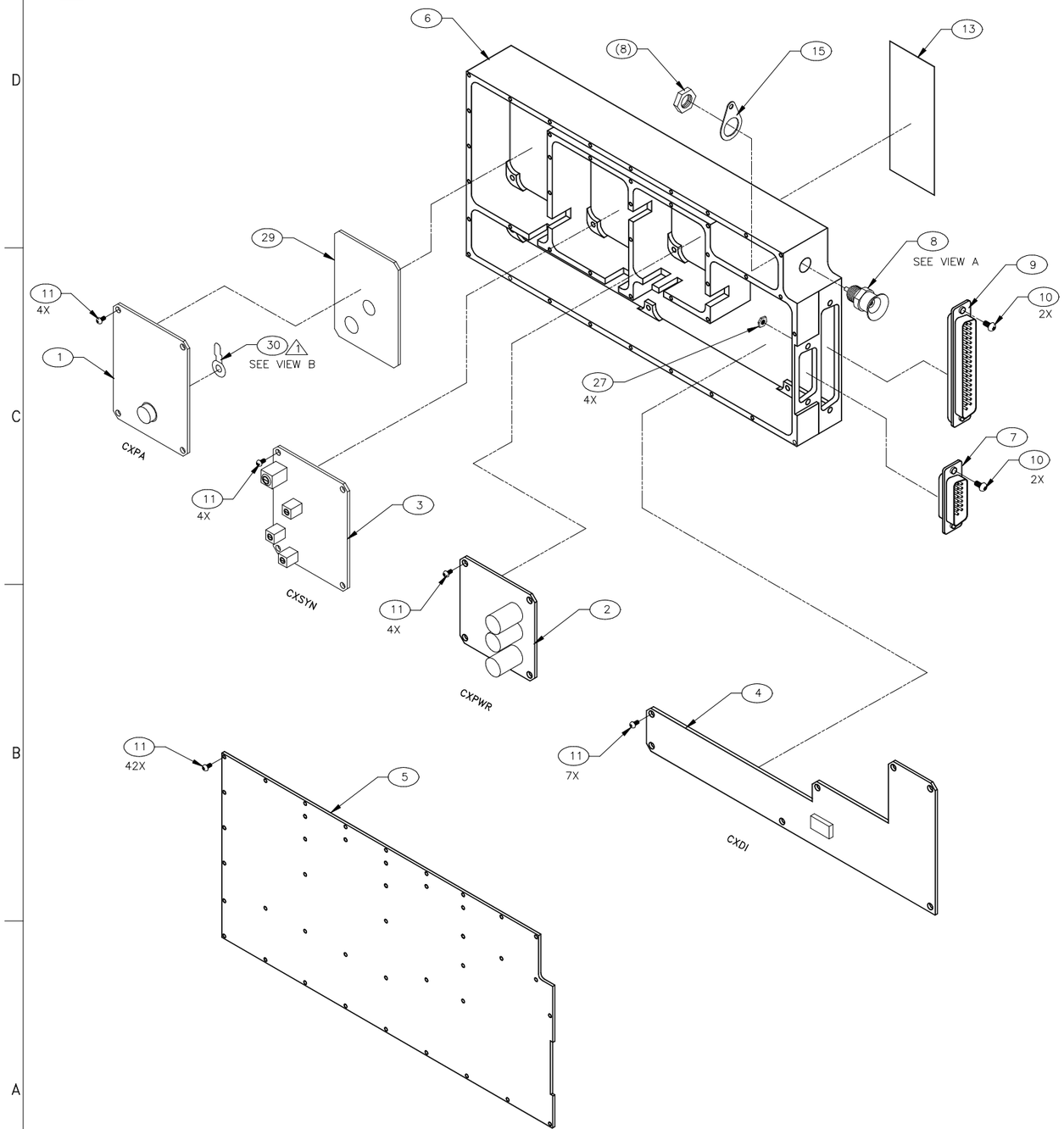

WIRING PREP.

END 1	END 2	WIRE COLOR	LENGTH (APPROX.) IN.	DESCRIPTION RF MODULE	DESCRIPTION BPREM
P1-1	CRDI-E1	BLACK	3.0	GND	GND
P1-2	CRDI-E2	BLUE	5.0	D6	RF_D6
P1-3	CRDI-E3	GRAY	5.5	D4	RF_D4
P1-4	CRDI-E4	VIOLET	5.5	D2	RF_D2
P1-5	CRDI-E5	YELLOW	5.5	D0	RF_D0
P1-6	CRDI-E48	WHITE	3.0	REV. 1	RX_REV. 1
P1-7	CRDI-E7	BLACK	3.0	GND	GND
P1-8	CRDI-E8	VIOLET	5.5	XMIT_ON	XMIT_ON
P1-9	CRDI-E9	BROWN	4.0	CLK-	RX_CLK-
P1-10	CRDI-E10	WHITE	3.0	DATA-	RX_DATA-
P1-11	N/C				
P1-12	N/C				
P1-13	N/C				
P1-14	CRDI-E41	YELLOW	5.0	MANCHESTER DATA OUT (AUDIO)	
P1-15	CRDI-E15	ORANGE	6.0	TX_LSB	TX_LSB
P1-16	N/C				
P1-17	N/C				
P1-18	N/C				
P1-19	CRDI-E19	RED	5.5	+5V	+5V
P1-19	CXPWR-E14 "LONG"	RED	5.5	+5V	+5V
P1-20	CRDI-E20	GRAY	5.5	D7	RX_D7
P1-21	CRDI-E21	VIOLET	4.5	D5	RX_D5
P1-22	CRDI-E22	YELLOW	5.5	D3	RX_D3
P1-23	CRDI-E23	BLUE	5.0	D1	RX_D1
P1-24	CRDI-E24	WHITE	4.0	REV. 0	RX_REV. 1/0
P1-25	CRDI-E25	BLACK	3.5	GND	GND
P1-26	CRDI-E8	COAX	11.0	TEMP. SENSOR	
P1-27	CRDI-E27	GREEN	4.5	CLK+	RX_CLK+
P1-28	CRDI-E28	YELLOW	4.5	DATA+	RX_DATA+
P1-29	N/C				
P1-30	N/C				
P1-31	N/C				
P1-32	CSYN-E4	YELLOW	7.5	TX_DATA (AUDIO)	
P1-33	CXDI-E33	ORANGE	6.0	TX_MSB	
P1-34	N/C				
P1-35	N/C				
P1-36	N/C				
P1-37	CXDI-E37	RED	4.5	+5V	+5V

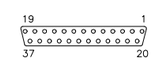

SOLDER SIDE

END 1	END 2	WIRE COLOR	LENGTH (APPROX.) IN.	DESCRIPTION RF MODULE	DESCRIPTION BPREM
P2-1	CXPWR-E10A	BLACK	7.0	GND	GND
P2-2	CXPWR-E10B	BLACK	7.0	GND	GND
P2-3	CXPWR-E10C	BLACK	7.0	GND	GND
P2-4	CXPWR-E10D	BLACK	7.0	GND	GND
P2-5	CXPWR-E6A	ORANGE	7.0	+12VX	+12VX
P2-6	N/C				
P2-7	N/C				
P2-8	N/C				
P2-9	CXPWR-E3A	RED	6.0	+12V	+12V
P2-10	CXPWR-E3B	RED	6.0	+12V	+12V
P2-11	CXPWR-E3C	RED	6.0	+12V	+12V
P2-12	CXPWR-E3D	RED	6.0	+12V	+12V
P2-13	N/C				
P2-14	N/C				
P2-15 CON	CXSYN-E8 CON	COAX		200KHZ	REF_200KHZ
P2-1 SHIELD	CXSYN-E7 SHIELD	COAX	9.5	GND	GND

SOLDER SIDE

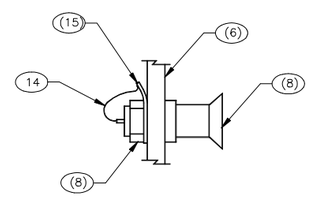

VIEW A

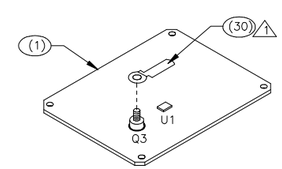

VIEW B

UNLESS OTHERWISE SPECIFIED DIMENSIONS ARE IN INCHES. TOLERANCES ARE:
DECIMAL .XX ± — ANGLE ± —
.XXX ± —
DO NOT SCALE DRAWING
BREAK ALL SHARP CORNERS AND EDGES
DIMENSIONS APPLY BEFORE FINISH

		DATE
DESIGN	M. XIE	9/99
DRAWN	C. TRAN	9/24/99
CHECKED	S. SMITH	1/26/00
APPROVED	M. EATON	1/26/00

THIS DRAWING IS THE EXCLUSIVE PROPERTY OF SERCEL / REPRODUCTION AND UNAUTHORIZED USE ARE PROHIBITED

DRAWING FILE AC10144ADAC

TITLE
ASSEMBLY DRAWING
TRANSMITTER MODULE
REM

© SERCEL, INC. 1999

SCALE	SIZE	TYPE	DRAWING NO.	REV.	SHEET
NONE	D	AD	2010144	AC	1/2

ASSY PCA WIRING
HOOKUP VIEW

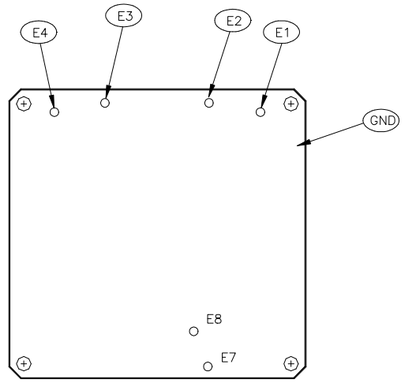

REM
CXPA

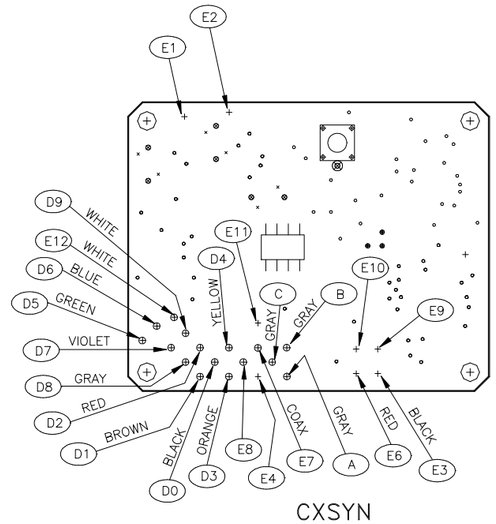

CXSYN

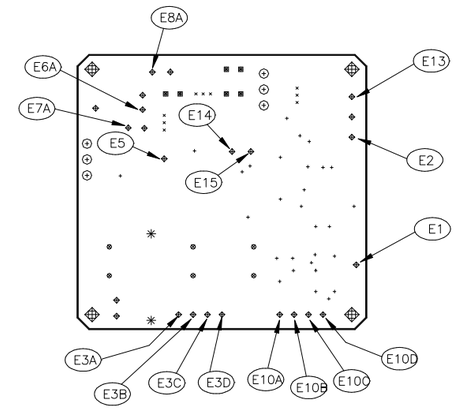

CXPWR

PCA WIRING HOOKUP TABLE			
END 1	END 2	WIRE COLOR	DESCRIPTION
J1 BNC CON	CXPA–E4	COAX	RF_OUT
J1 BNC SHIELD	CXPA–E6	COAX	RF_GND
CXSYN–E1	CXPA–E1	COAX	RF_IN
CXSYN–E2 SHIELD	CXPA–E5	COAX	RF_GND
CXPWR–E6A	CXPA–E2	ORANGE	+12Vxin
CXPWR–E5	CXPA–E3	ORANGE	PA_+12V
CXPWR–E7A	CXSYN–E6	RED	+5Vx
CXPWR–E8A	CXSYN–E3	BLACK	+8Vx
CXPWR–E15	CXSYN–E12	WHITE	+5Vx
CXPWR–E1	CXDI–E46	WHITE	TX_ON
CXPWR–E2	CXDI–D13	GRAY	PWR_LEVEL_SELECT
CXPWR–E13	CXDI–E42	BLUE	FREQ_DATA_ENABLE
CXSYN–D0	CXDI–D0	BLACK	FREQ_DATA_BUS
CXSYN–D1	CXDI–D1	BROWN	FREQ_DATA_BUS
CXSYN–D2	CXDI–D2	RED	FREQ_DATA_BUS
CXSYN–D3	CXDI–D3	ORANGE	FREQ_DATA_BUS
CXSYN–D4	CXDI–D4	YELLOW	FREQ_DATA_BUS
CXSYN–D5	CXDI–D5	GREEN	FREQ_DATA_BUS
CXSYN–D6	CXDI–D6	BLUE	FREQ_DATA_BUS
CXSYN–D7	CXDI–D7	VIOLET	FREQ_DATA_BUS
CXSYN–D8	CXDI–D8	GRAY	FREQ_DATA_BUS
CXSYN–D9	CXDI–D9	WHITE	FREQ_DATA_BUS
CXSYN–A	CXDI–D10	GRAY	GAIN_SELECT_BUS
CXSYN–B	CXDI–D11	GRAY	GAIN_SELECT_BUS
CXSYN–C	CXDI–D12	GRAY	GAIN_SELECT_BUS

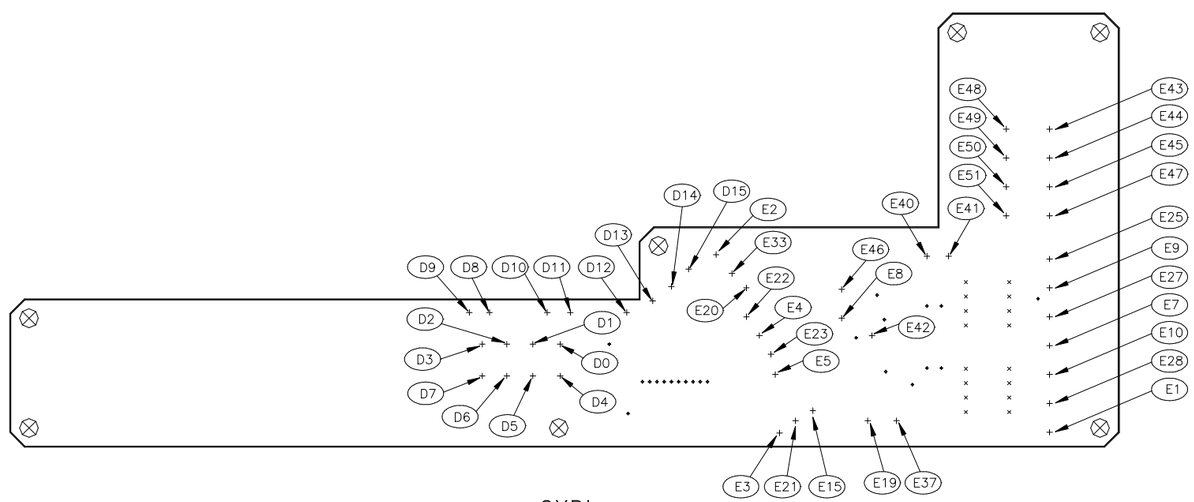

CXDI

DRAWING FILE					
AC2010144ADAC2					
SCALE	SIZE	TYPE	DRAWING NO.	REV.	SHEET
NONE	D	AD	2010144	AC	2/2

REVISIONS					
REV	ACTION	DRAWN	CHECKED	APPRV'D	DATE
AA	R99037	DW	S. SMITH	DW	1/12/00

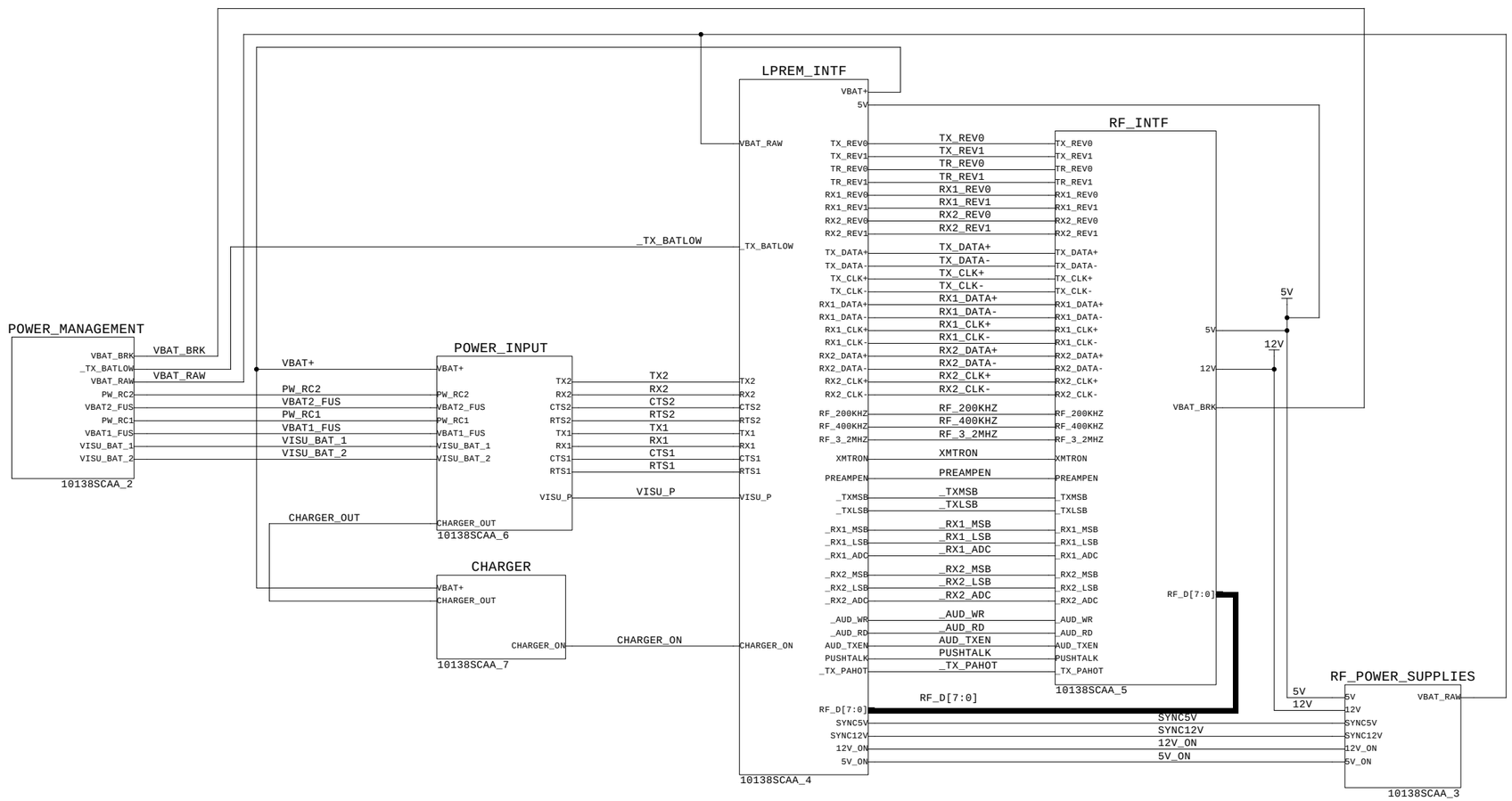

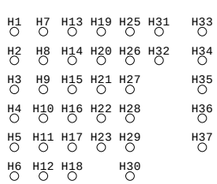

H24 mounting hole is used to provide chassis/earth ground connection for transverse interface on LPREM.

THIS DRAWING IS THE EXCLUSIVE PROPERTY OF SERCEL. REPRODUCTION AND UNAUTHORIZED USE ARE PROHIBITED.

	DATE
DESIGN NANTES/TULSA	12/11/98
DRAWN DW	12/11/98
CHECKED S. SMITH	1-12-00
APPROVED D. WILKERSON	1/12/00

SCHEMATIC FILE 10138SCAA_1 4-18-2000_10:56

TITLE

PCA, BPREM
PROJECT SHEET

© SERCEL INC. 1999

SCALE	SIZE	DOC TYPE	DRAWING NO.	REV	SHEET
NA	D	SC	2010138	AA	1 / 7

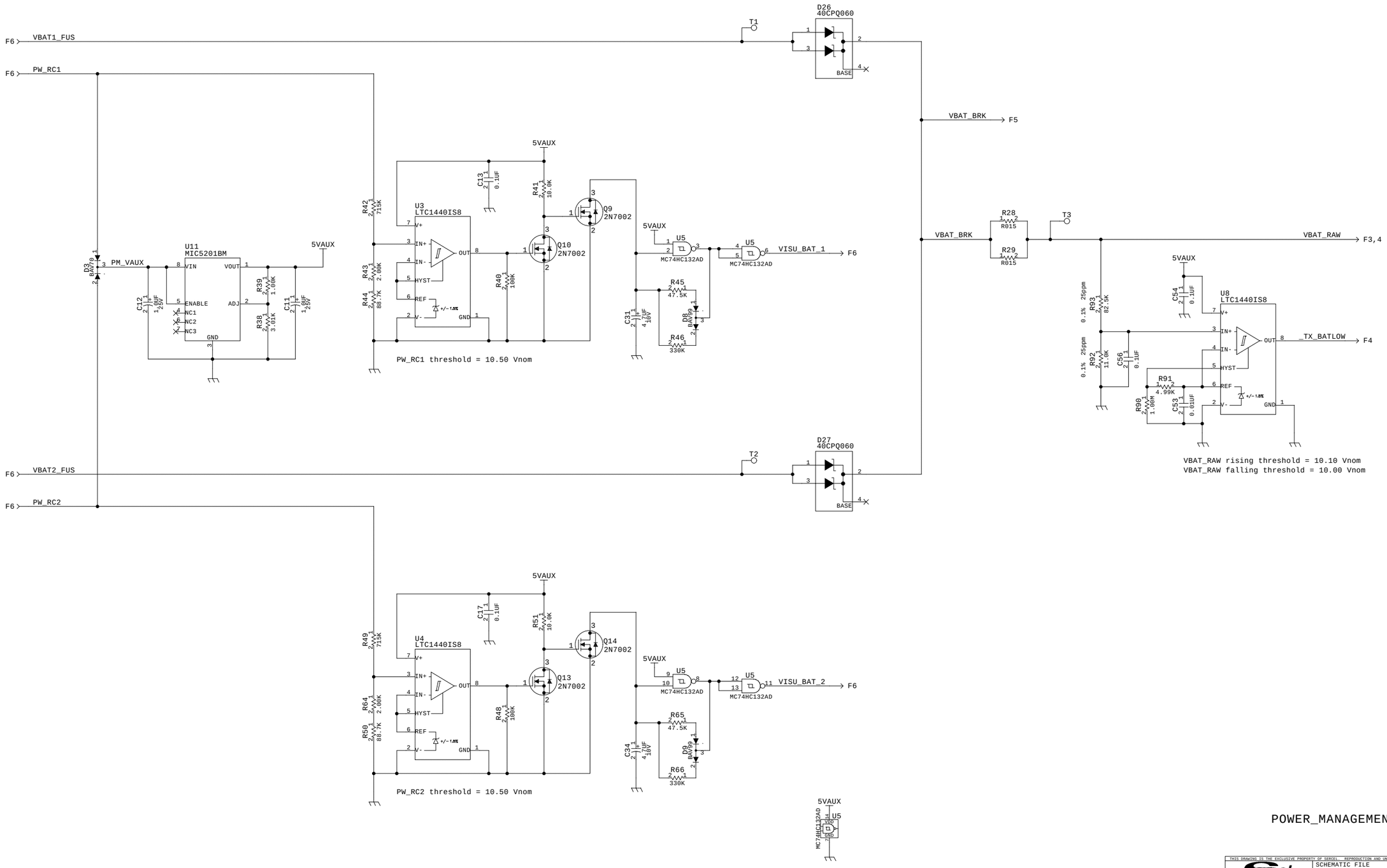

POWER_MANAGEMENT

THIS DRAWING IS THE EXCLUSIVE PROPERTY OF SERCEL. REPRODUCTION AND UNAUTHORIZED USE ARE PROHIBITED.

SCHEMATIC FILE 10138SCAA_2 1-12-2000_15:00					
TITLE PCA, BPREM					
SCALE	SIZE	DOC TYPE	DRAWING NO.	REV	SHEET
NA	D	SC	2010138	AA	2 / 7

© SERCEL INC. 1999

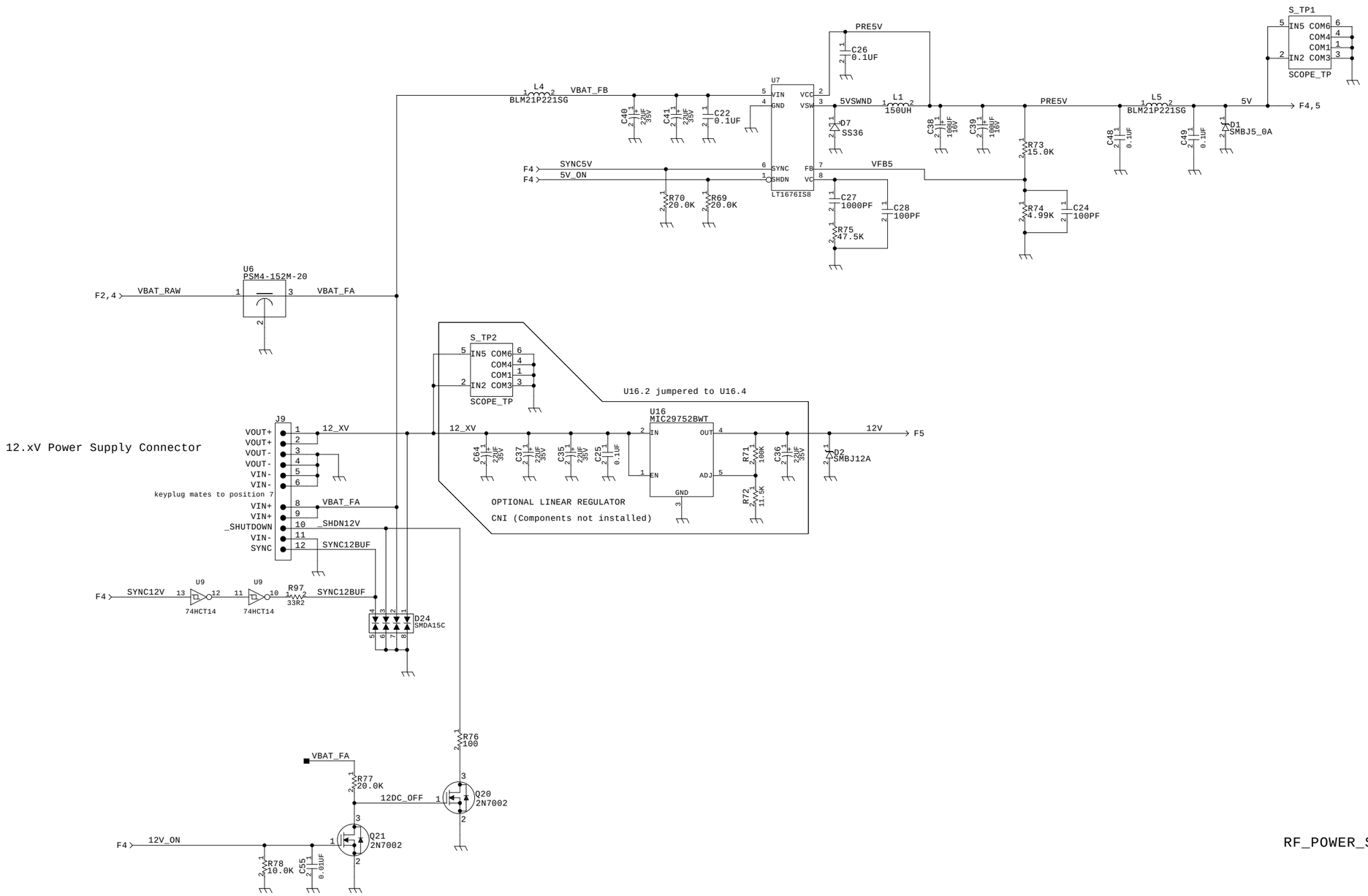

RF_POWER_SUPPLIES

THIS DRAWING IS THE EXCLUSIVE PROPERTY OF SERCEL. REPRODUCTION AND UNAUTHORIZED USE ARE PROHIBITED.

SCHEMATIC FILE 10138SCAA_3 1-12-2000_15:10

TITLE PCA, BPREM

© SERCEL INC., 1999

SCALE	SIZE	DOC TYPE	DRAWING NO.	REV	SHEET
NA	D	SC	2010138	AA	3 / 7

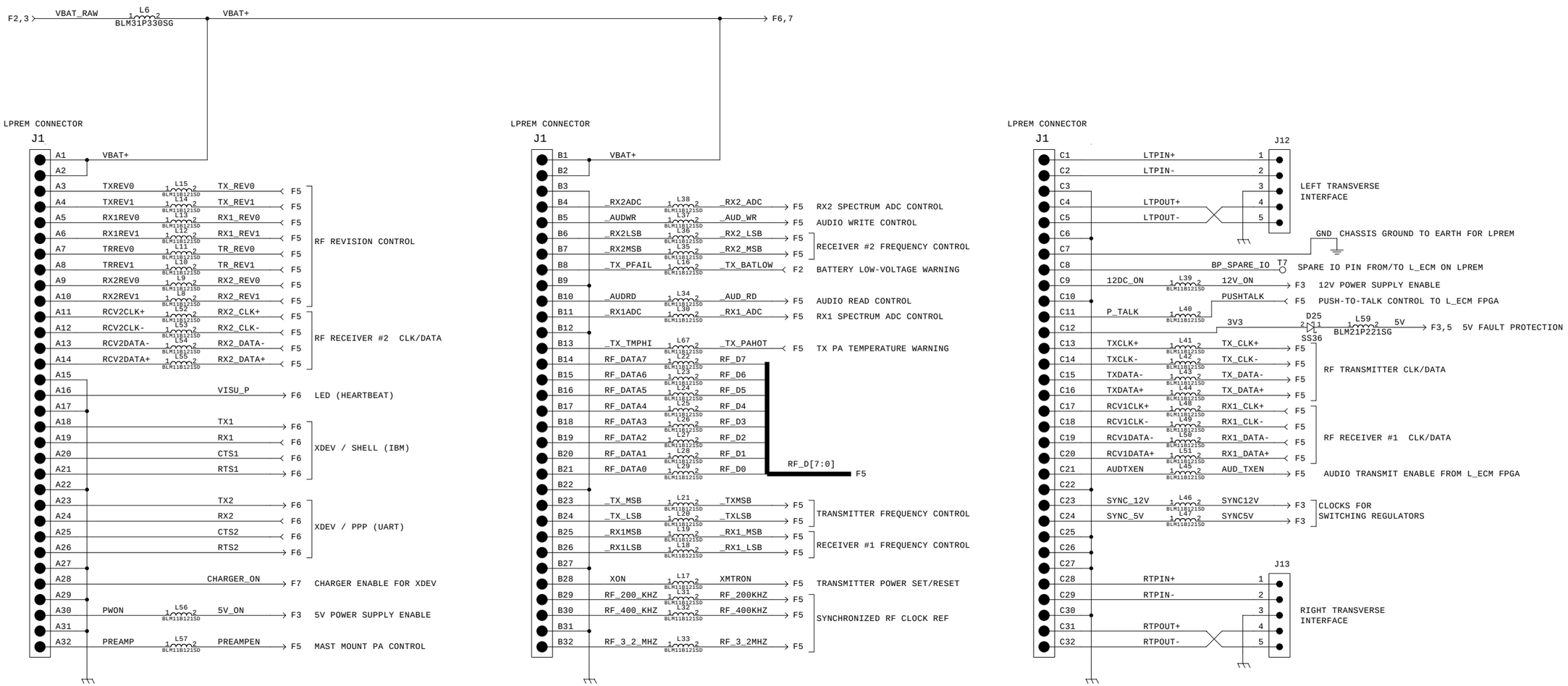

LPREM INTERCONNECTS

THIS DRAWING IS THE EXCLUSIVE PROPERTY OF SERCEL. REPRODUCTION AND UNAUTHORIZED USE ARE PROHIBITED.

SCHEMATIC FILE 10138SCAA_4				1-12-2000_15:02	
TITLE PCA, BPREM					
SCALE NA	SIZE D	DOC TYPE SC	DRAWING NO. 2010138	REV AA	SHEET 4 / 7

© SERCEL INC. 1999

1. DEFAULT POSITION OF CLOCK JUMPERS SHOWN.
2. R98 & R99 MUST BE REMOVED AND R100 & R101 INSTALLED IN ORDER TO CONFIGURE THE BPREM FOR DIRECT BATTERY OPERATION OF THE TRANSMITTER.

U15 is placed near RX2 DB9 conn.

U9 is placed at LPREM conn.

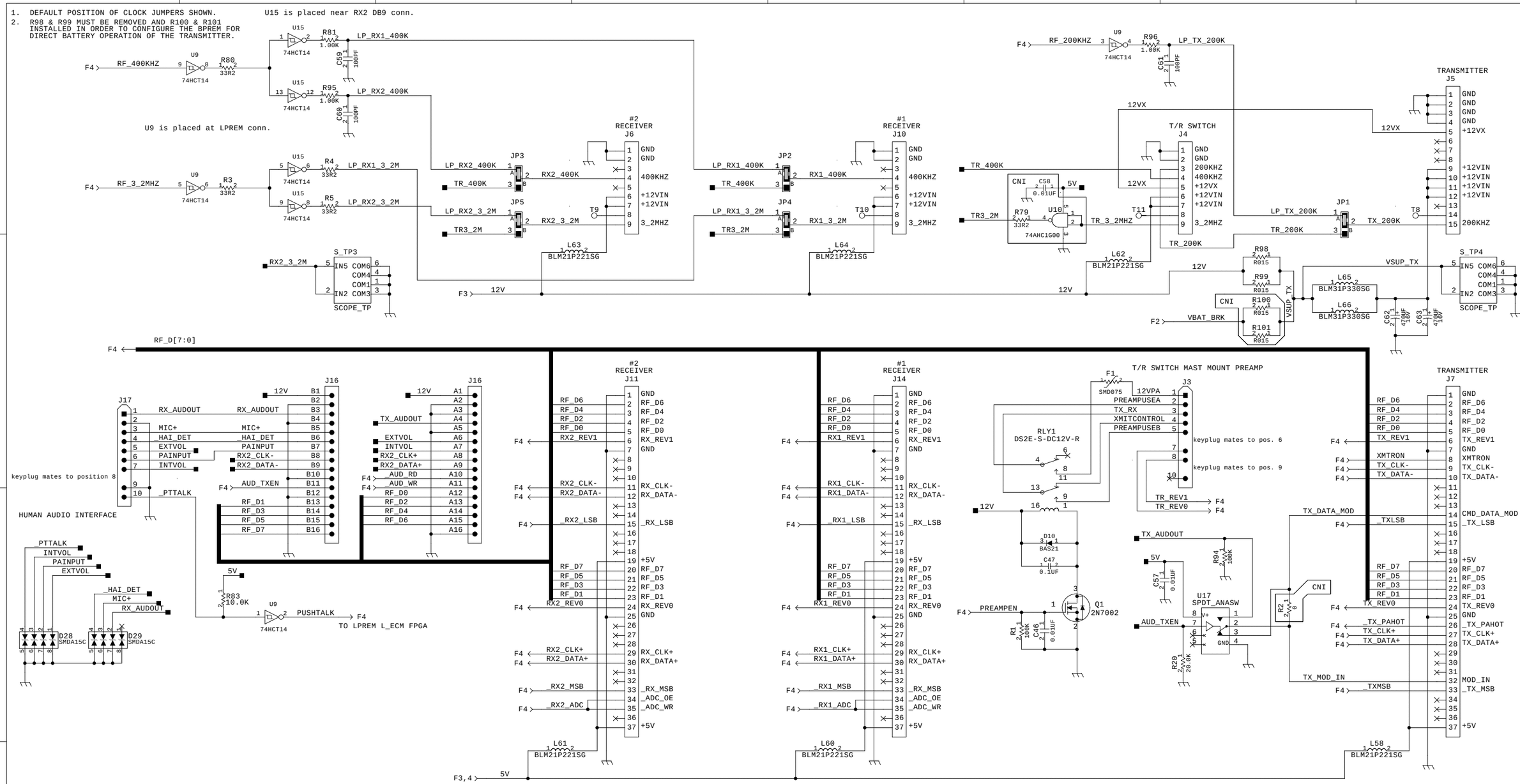

RF POWER & DATA

THIS DRAWING IS THE EXCLUSIVE PROPERTY OF SERCEL. REPRODUCTION AND UNAUTHORIZED USE ARE PROHIBITED.							
sercel	SCHEMATIC FILE 10138SCAA_5				1-12-2000_15:18		
TITLE PCA, BPREM							
SCALE	SIZE	DOC TYPE	DRAWING NO.			REV	SHEET
NA	D	SC	2010138			AA	5 / 7

© SERCEL INC. 1999

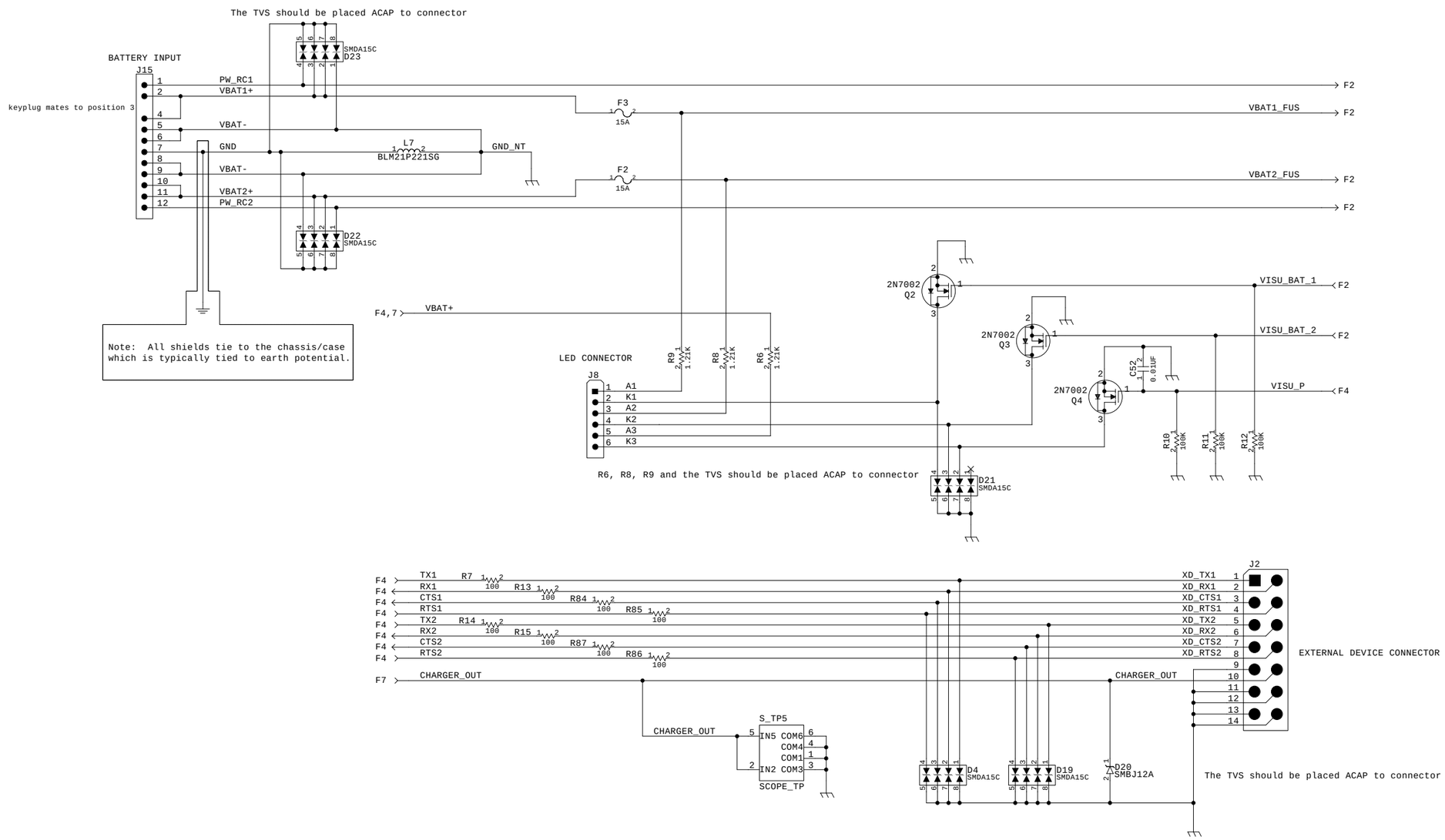

BATTERY/LED/EXTERNAL DEVICE CONNECTORS

THIS DRAWING IS THE EXCLUSIVE PROPERTY OF SERCEL. REPRODUCTION AND UNAUTHORIZED USE ARE PROHIBITED.

SCHEMATIC FILE 10138SCAA_6 1-12-2000_15:04

TITLE PCA, BPREM

© SERCEL INC. 1999

SCALE	SIZE	DOC TYPE	DRAWING NO.	REV	SHEET
NA	D	SC	2010138	AA	6 / 7

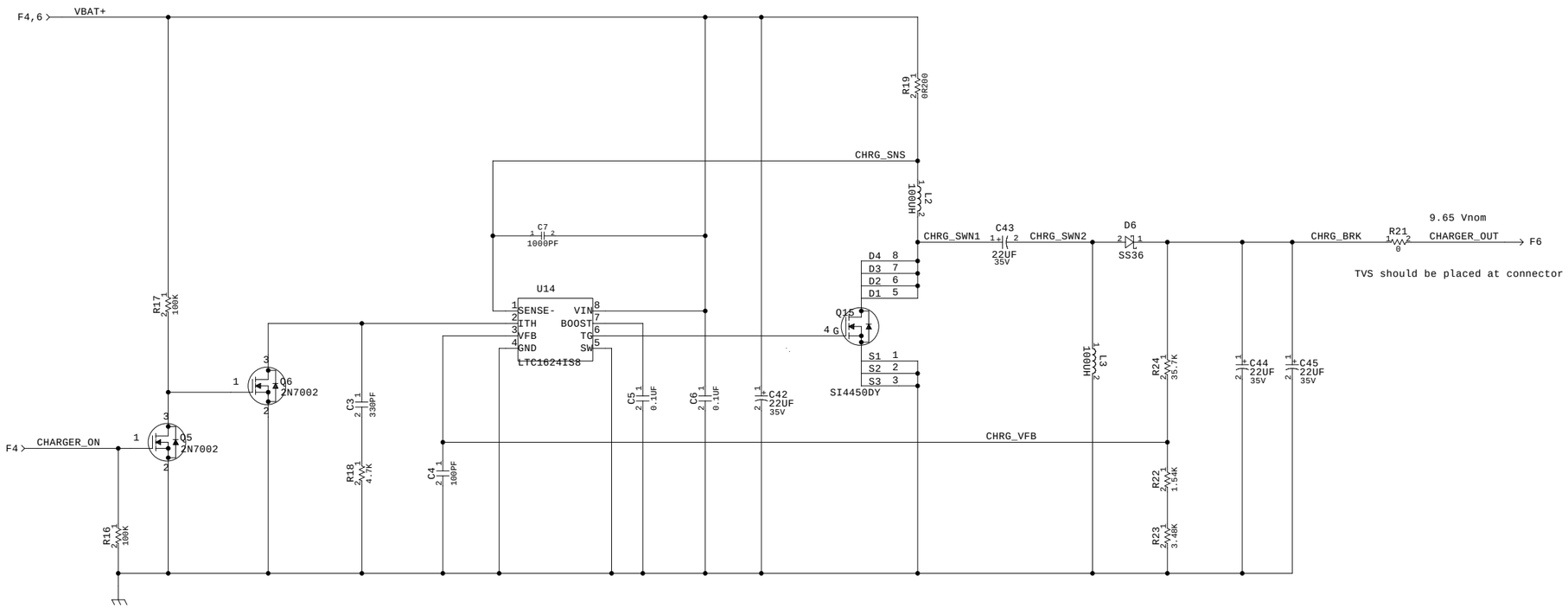

EXTERNAL DEVICE BATTERY CHARGER

THIS DRAWING IS THE EXCLUSIVE PROPERTY OF SERCEL. REPRODUCTION AND UNAUTHORIZED USE ARE PROHIBITED.

SCHEMATIC FILE
10138SCAA_7 1-12-2000_15:04

TITLE
PCA, BPREM

© SERCEL INC. 1999

SCALE	SIZE	DOC TYPE	DRAWING NO.	REV	SHEET
NA	D	SC	2010138	AA	7 / 7

REVISIONS					
REV	ACTION	DRAWN	CHECKED	APPRV'D	DATE
AA	R99038	M.Xie	S. SMITH	M.Xie	1/17/00
AB	E10149AD	M.Xie	S. SMITH	M.Xie	3/30/00

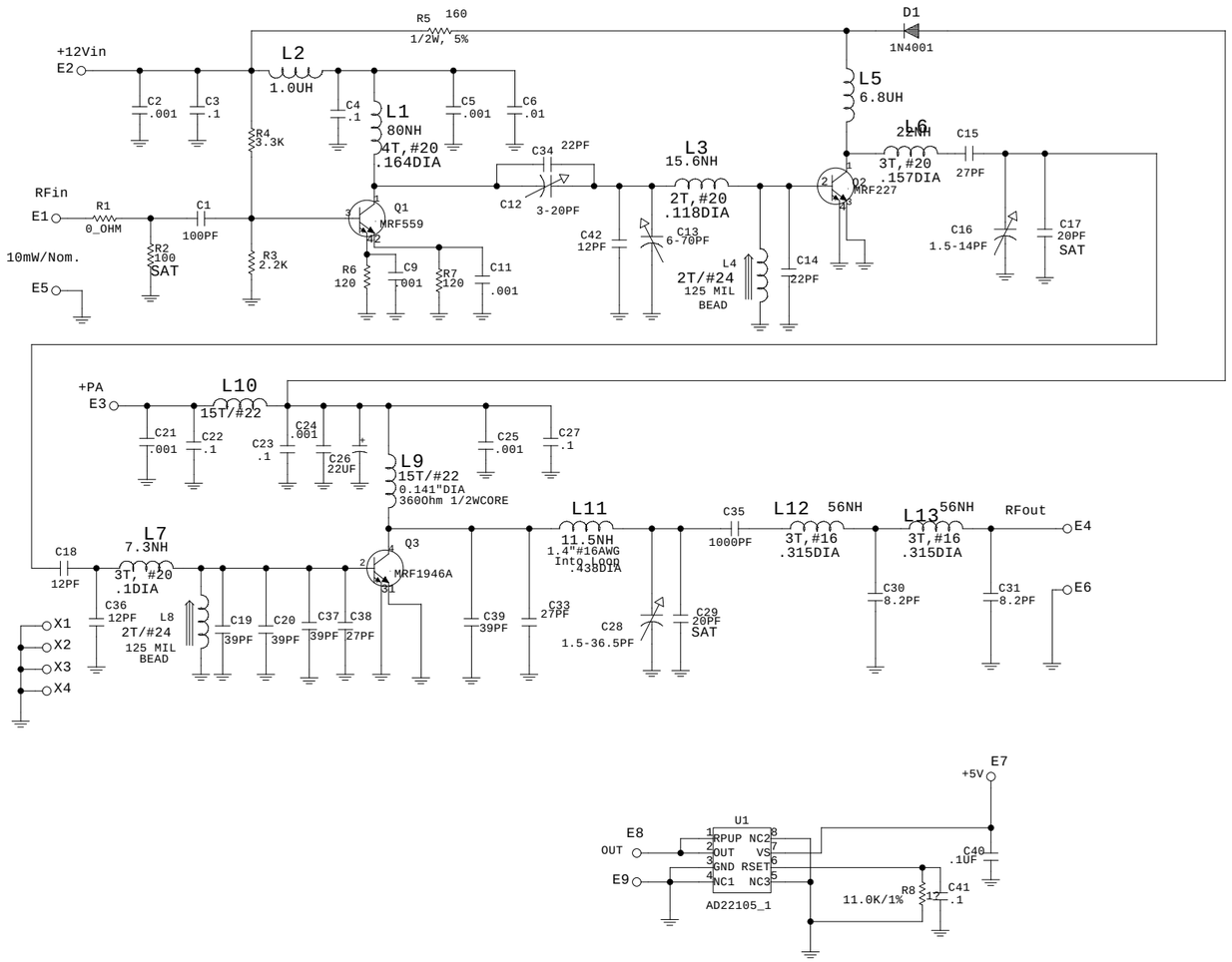

	DATE	
DESIGN MICHAEL XIE	8/17/99	
DRAWN MICHAEL XIE	1/17/00	
CHECKED SCOTT SMITH	3/7/00	
APPROVED MICHAEL XIE	3/7/00	

THIS DRAWING IS THE EXCLUSIVE PROPERTY OF SERCEL. REPRODUCTION AND UNAUTHORIZED USE ARE PROHIBITED.

SCHEMATIC FILE 10149SCAB 4-18-2000_15:24

TITLE

PCA, REM XMTR RF PWR AMP

© SERCEL INC. 1999

SCALE	SIZE	DOC TYPE	DRAWING NO.	REV	SHEET
NA	D	SC	2010149	AB	1 / 1

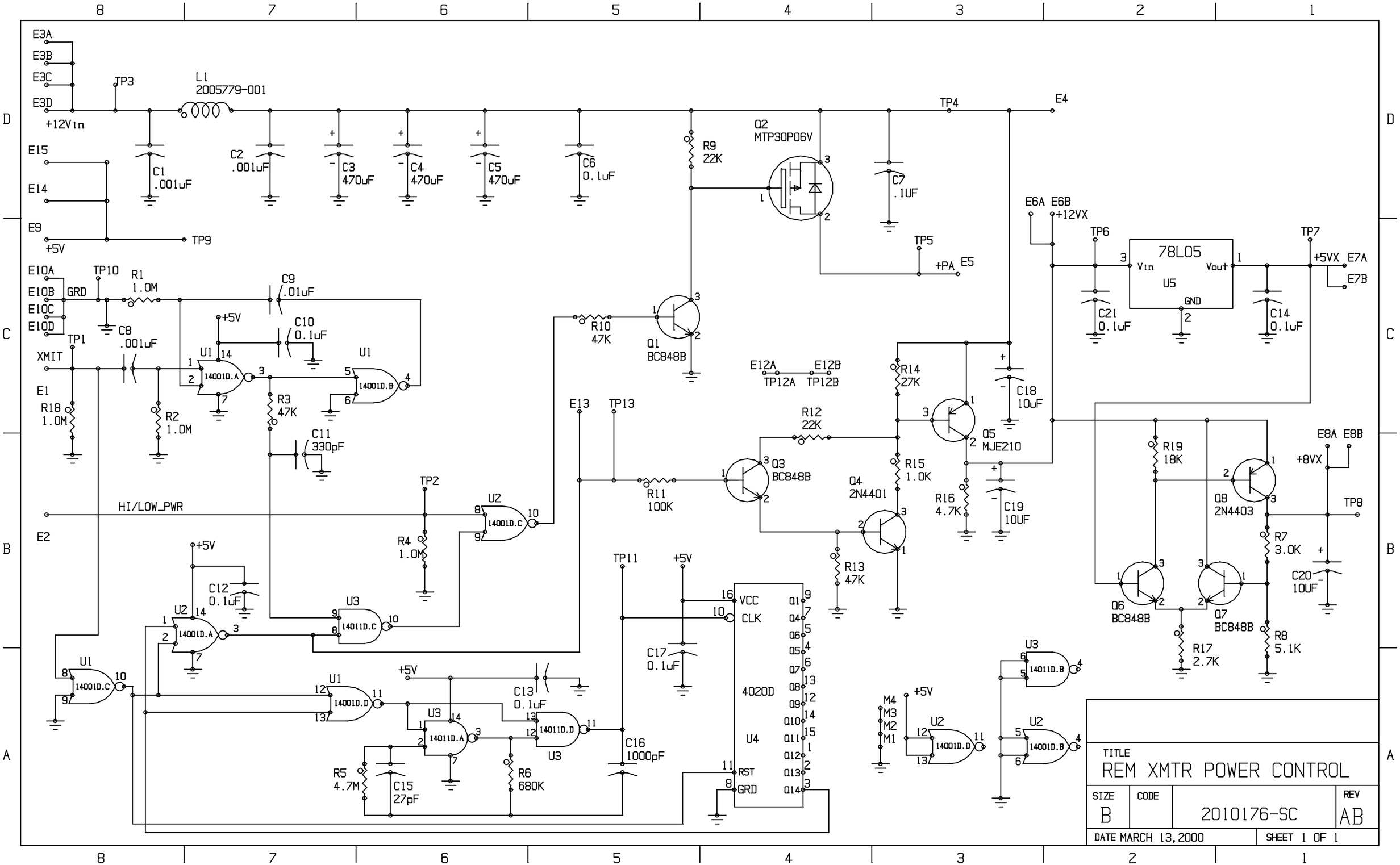
E3A
E3B
E3C
E3D
+12Vin
TP3
L1
2005779-001
C1
.001uF
C2
.001uF
C3
470uF
C4
470uF
C5
470uF
C6
0.1uF
R9
22K
Q2
MTP30P06V
C7
.1UF
TP4
E4
E15
E14
E9
+5V
TP9
TP5
+PA
E5
E6A
E6B
+12VX
TP6
78L05
Vin
Vout
GND
U5
TP7
+5VX
E7A
E7B
C21
0.1uF
C14
0.1uF
E10A
E10B
E10C
E10D
GRD
TP10
R1
1.0M
C9
.01uF
C8
.001uF
TP1
XMIT
E1
R18
1.0M
R2
1.0M
U1
14001D.A
14001D.B
C10
0.1uF
R3
47K
C11
330pF
R10
47K
Q1
BC848B
E12A
E12B
TP12A
TP12B
R14
27K
Q5
MJE210
C18
10uF
E13
TP13
R12
22K
Q3
BC848B
R11
100K
Q4
2N4401
R15
1.0K
R16
4.7K
C19
10UF
R13
47K
R19
18K
E8A
E8B
+8VX
Q8
2N4403
TP8
R7
3.0K
C20
10UF
Q6
BC848B
Q7
BC848B
R17
2.7K
R8
5.1K
TP2
HI/LOW_PWR
E2
U2
14001D.C
R4
1.0M
U3
14011D.C
C12
0.1uF
14001D.A
14001D.C
14001D.D
TP11
C17
0.1uF
C13
0.1uF
14011D.A
14011D.D
C16
1000pF
R5
4.7M
C15
27pF
R6
680K
VCC
CLK
RST
GRD
4020D
U4
M4
M3
M2
M1
14011D.B
14001D.B
TITLE
REM XMTR POWER CONTROL
SIZE
B
CODE
2010176-SC
REV
AB
DATE MARCH 13, 2000
SHEET 1 OF 1

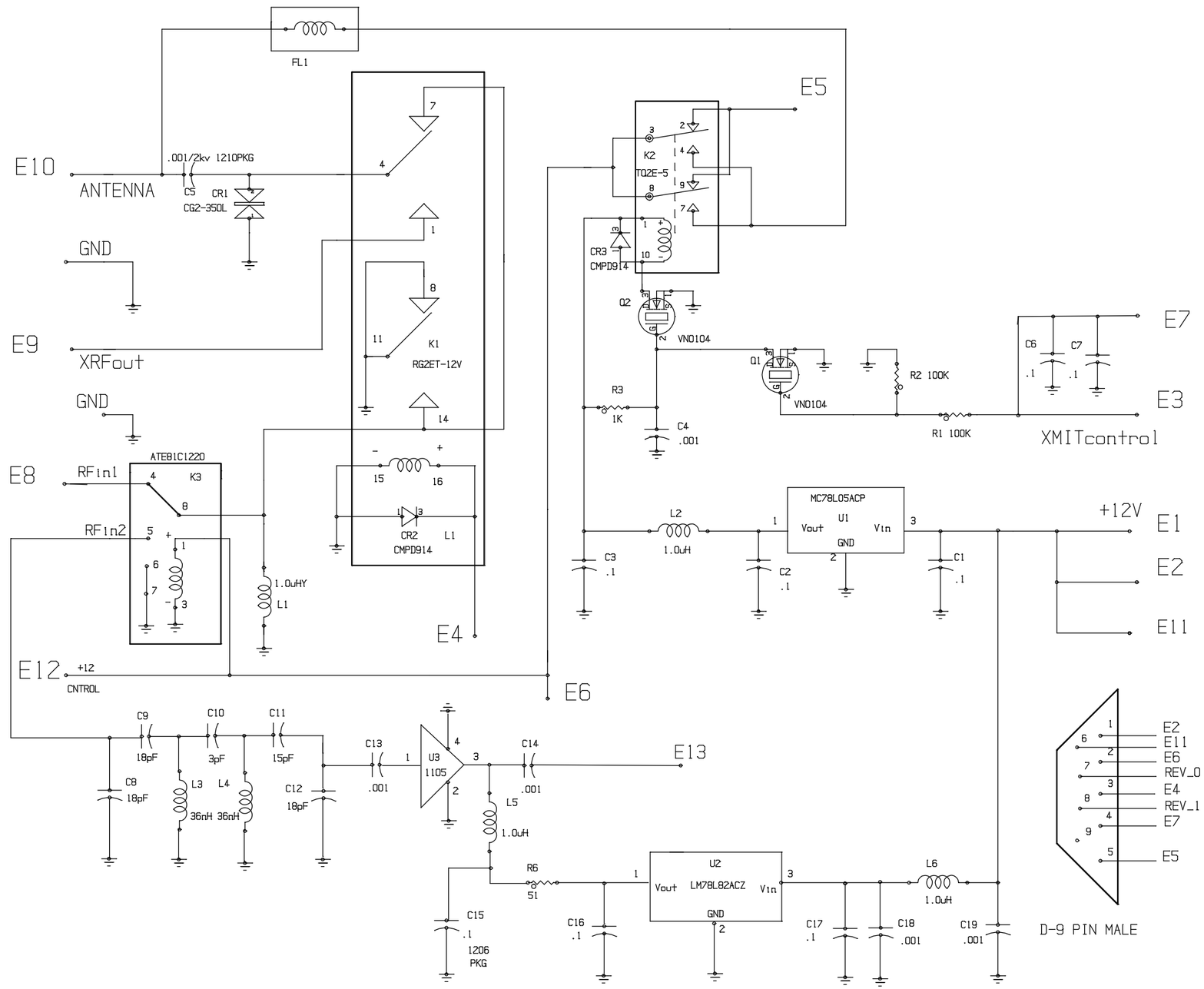

SERCEL			
TITLE REM T/R SWITCH CONTROL			
SIZE C	CODE	2010178-SC	REV AB
DATE 3-30-00		SHEET 1 OF 1	

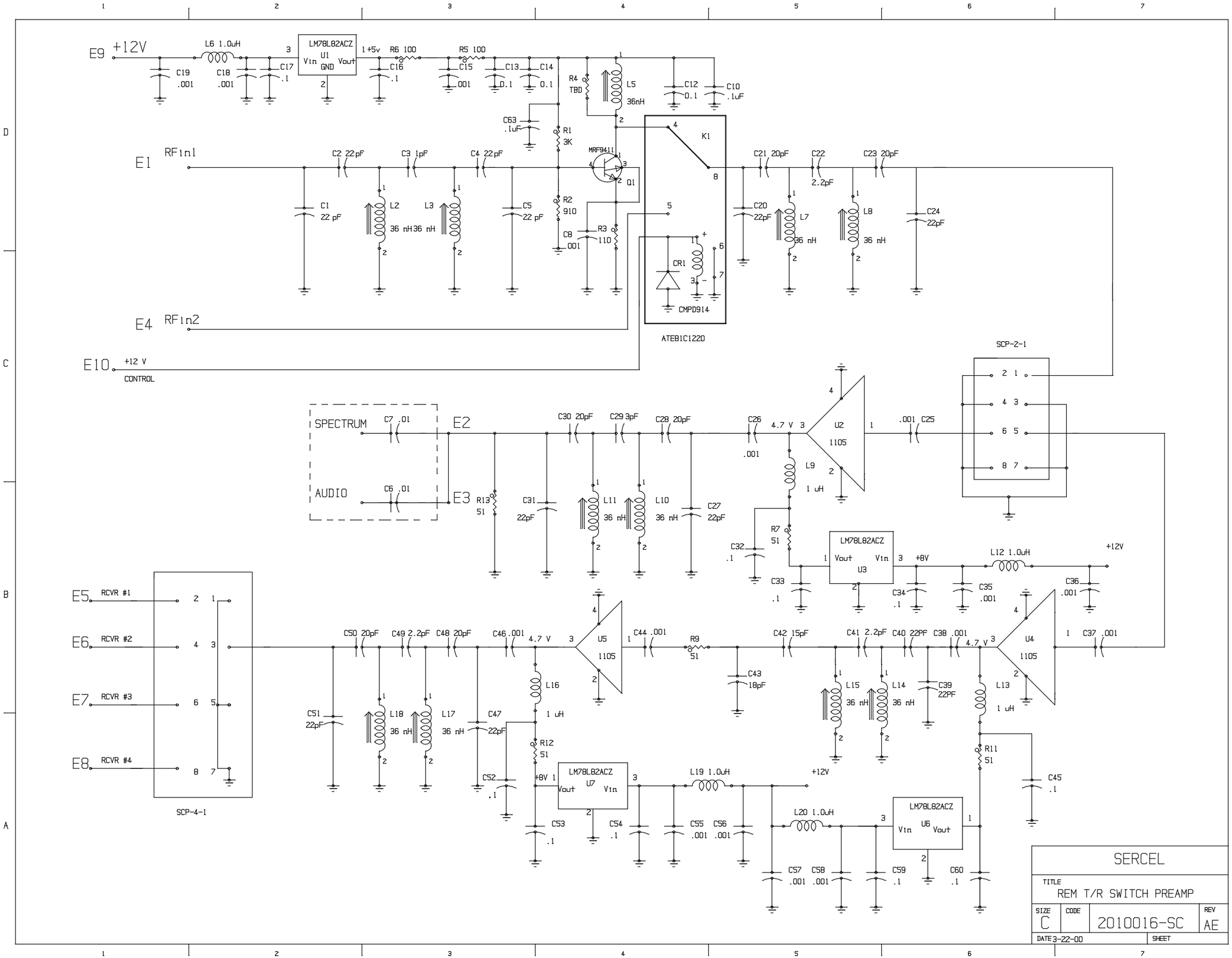

SERCEL

TITLE
REM T/R SWITCH PREAMP

SIZE	CODE		REV
C		2010016-SC	AE
DATE 3-22-00		SHEET	

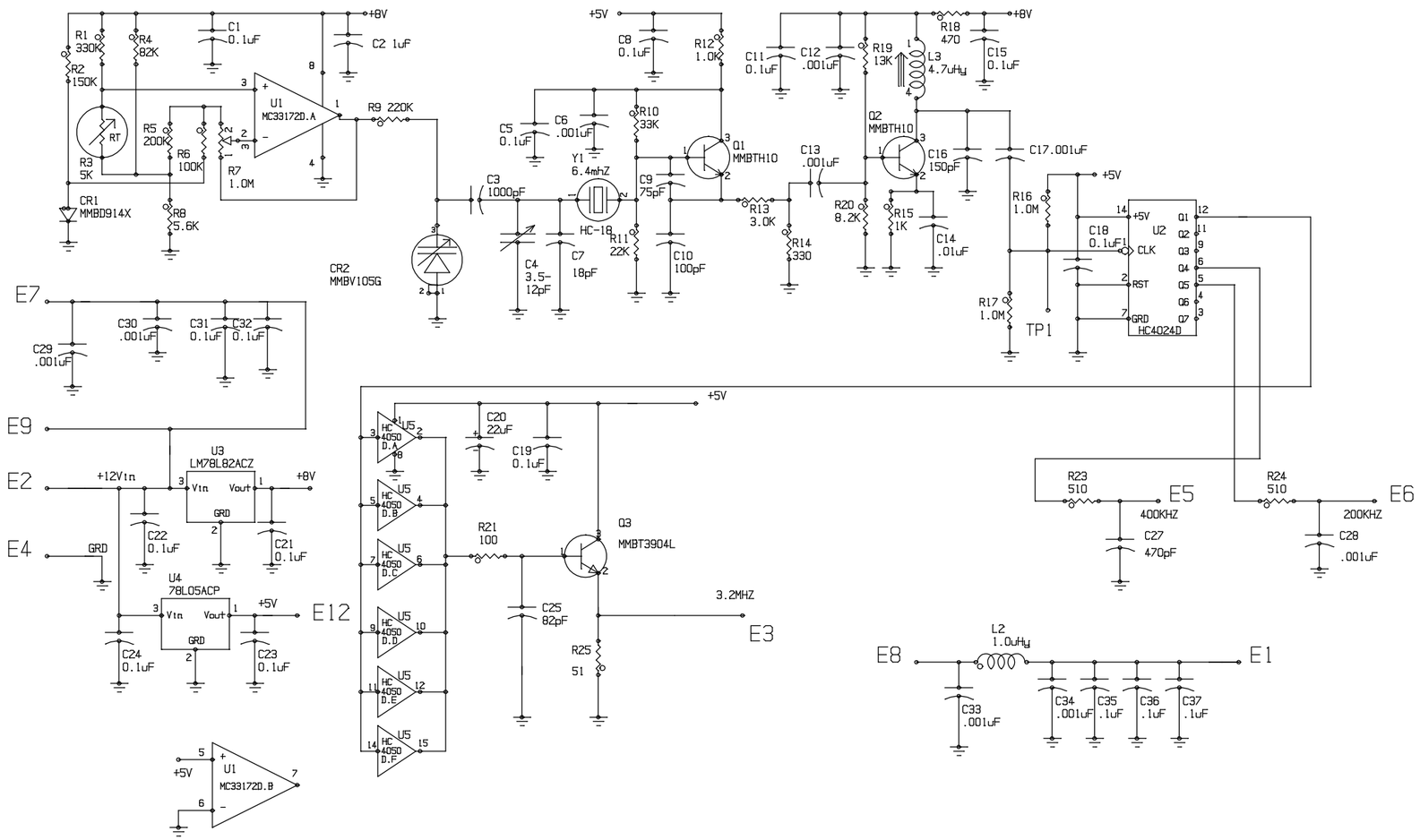

SERCEL			
TITLE REM T/R SWITCH REFERENCE			
SIZE C	CODE	2010018-SC	REV AC
DATE 3-22-00		SHEET 1 OF 1	

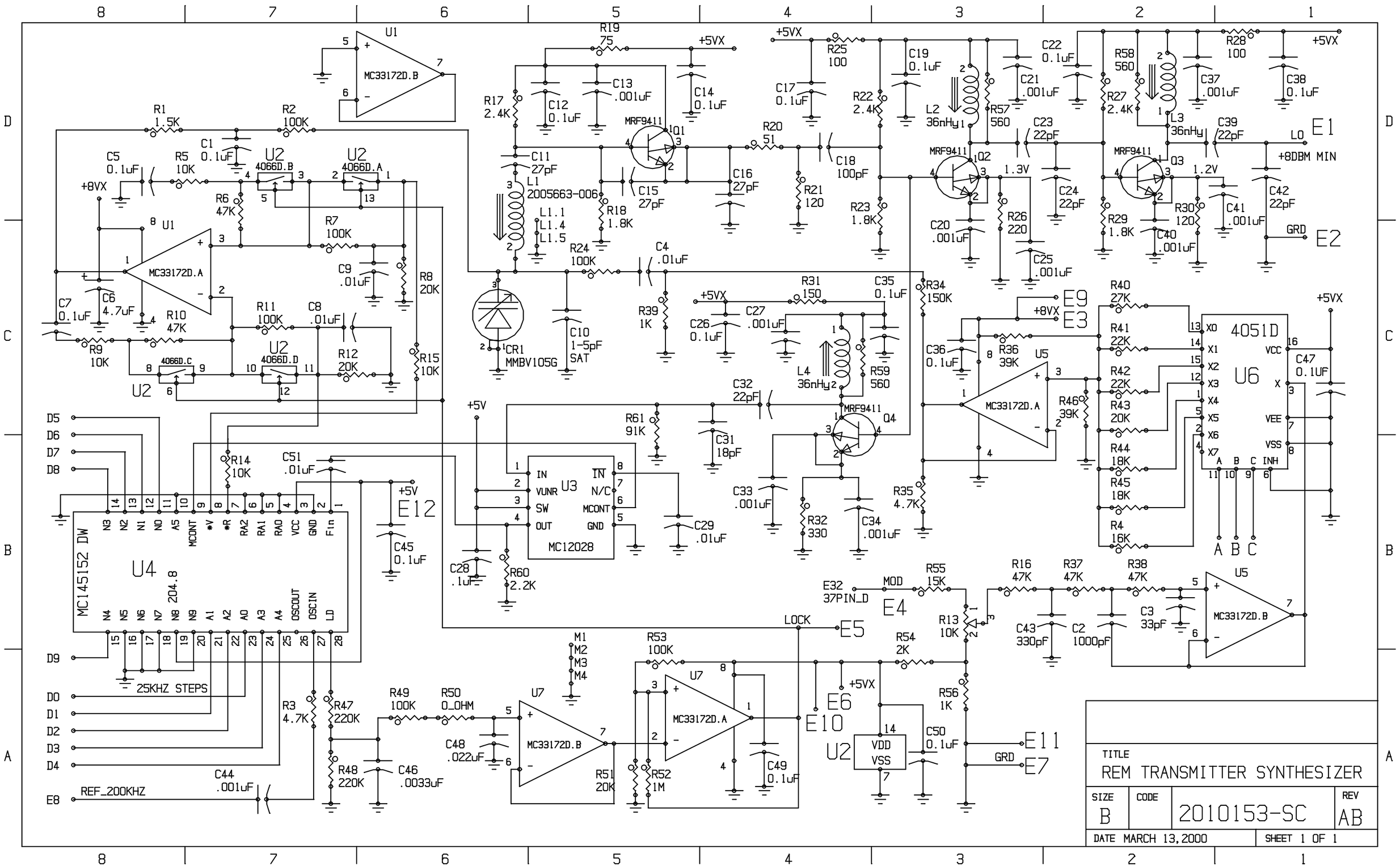
U1
MC33172D.B
R1 1.5K
R2 100K
C1 0.1uF
C5 0.1uF
R5 10K
+8VX
U2 4066D.B
U2 4066D.A
R6 47K
R7 100K
U1
MC33172D.A
C9 .01uF
R8 20K
C7 0.1uF
C6 4.7uF
R10 47K
R11 100K
C8 .01uF
R9 10K
U2 4066D.C
U2 4066D.D
R12 20K
R15 10K
D5
D6
D7
D8
R14 10K
C51 .01uF
+5V
E12
C45 0.1uF
U4
MC145152 DW
204.8
N3 N2 N1 N0 A5 MCONT *V *R RA2 RA1 RA0 VCC GND Fin
N4 N5 N6 N7 N8 N9 A1 A2 A0 A3 A4 OSCOUT OSCIN LD
D9
25KHZ STEPS
D0
D1
D2
D3
D4
E8
REF_200KHZ
C44 .001uF
R3 4.7K
R47 220K
R48 220K
C46 .0033uF
R19 75
+5VX
R17 2.4K
C12 0.1uF
C13 .001uF
C14 0.1uF
MRF9411
Q1
C11 27pF
L1 2005663-006
L1.1
L1.4
L1.5
R18 1.8K
C15 27pF
C16 27pF
R20 51
R21 120
C18 100pF
R23 1.8K
R24 100K
C4 .01uF
CR1 MMBV105G
C10 1-5pF SAT
R39 1K
R31 150
C35 0.1uF
C26 0.1uF
C27 .001uF
L4 36nHy2
R59 560
C32 22pF
Q4
R61 91K
C31 18pF
U3
MC12028
IN
VUNR
SW
OUT
N/C
MCONT
GND
C28 .1uF
R60 2.2K
C29 .01uF
C33 .001uF
R32 330
C34 .001uF
R35 4.7K
R34 150K
R25 100
C17 0.1uF
R22 2.4K
C19 0.1uF
L2 36nHy1
R57 560
C21 .001uF
C22 0.1uF
C23 22pF
MRF9411
Q2
1.3V
C24 22pF
C20 .001uF
R26 220
C25 .001uF
R58 560
R27 2.4K
C37 .001uF
R28 100
C38 0.1uF
L3 36nHy
C39 22pF
Q3
1.2V
R29 1.8K
R30 120
C41 .001uF
C40 .001uF
C42 22pF
LO
E1
+8DBM MIN
GRD
E2
E9
E3
R36 39K
U5
MC33172D.A
R46 39K
R40 27K
R41 22K
R42 22K
R43 20K
R44 18K
R45 18K
R4 16K
4051D
U6
X0 X1 X2 X3 X4 X5 X6 X7
A B C INH
VCC
VEE
VSS
C47 0.1UF
A B C
E32
37PIN_D
MOD
R55 15K
E4
R16 47K
R37 47K
R38 47K
U5
MC33172D.B
C3 33pF
C43 330pF
C2 1000pF
LOCK
E5
R13 10K
R54 2K
R56 1K
M1
M2
M3
M4
R53 100K
U7
MC33172D.A
R49 100K
R50 0_OHM
U7
MC33172D.B
C48 .022uF
R51 20K
R52 1M
C49 0.1uF
E6
E10
+5VX
U2
VDD
VSS
C50 0.1uF
GRD
E11
E7
TITLE
REM TRANSMITTER SYNTHESIZER
SIZE
B
CODE
2010153-SC
REV
AB
DATE MARCH 13, 2000
SHEET 1 OF 1