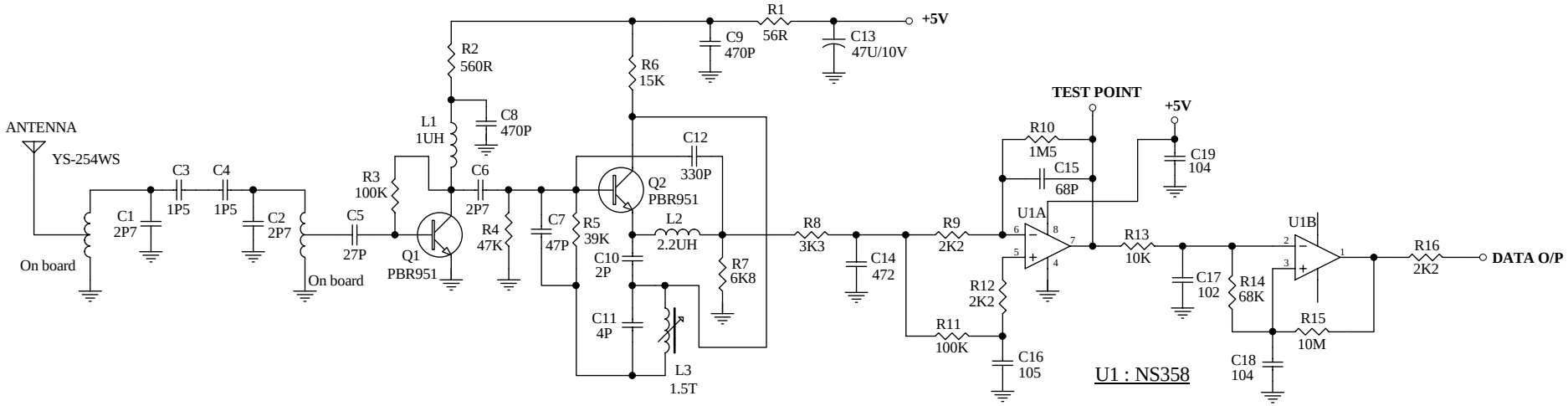

NOTE: (1) FREQUENCY : 433.92MHZ .

8 IN 1

Checked By :	*Enginner :*	*Drawn By :*

Title	WINCH RF (433.92M)	
Size A3	Number P2030362	Revision 1.0
Date: 19-Oct-2005	Sheet of 1	
File: E:\相的資~1\SCH_DWG\S203032.SCH	Drawn By: Lai	