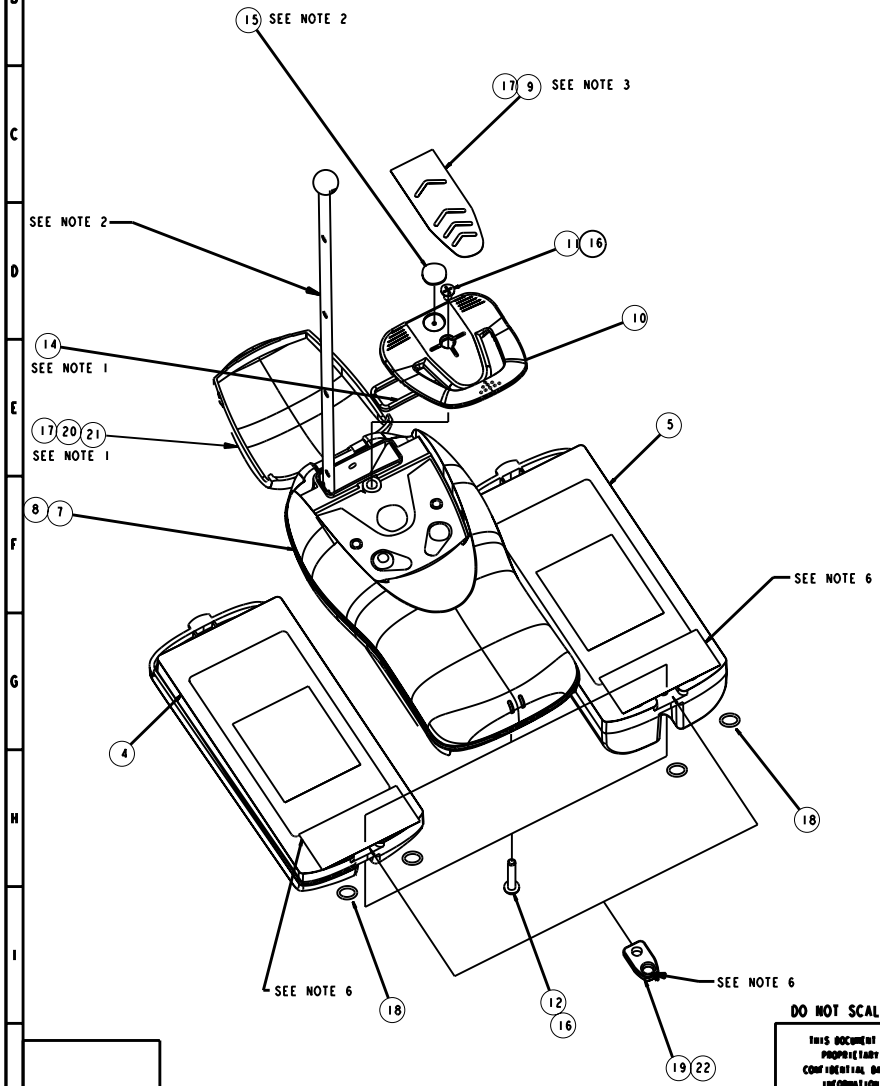

ITEMS MARKED * NOT SHOWN IN THE ASSY.

	ITEM No.	PART No.	DRG No.	QTY	ITEM DESCRIPTION
*	1	85-705-xxx	85-705-xxxD	1	LABEL BARCODE
*	2	85-703-XXX	85-703-XXXD	1	BOX
*	3	85-902-XXX	85-902-XXXD	1	USER MANUAL
	4	85-720-XXX	85-720-XXXA	1	BATTERY PACK -20°C
	5	85-740-XXX	85-740-XXXA	1	BATTERY PACK -40°C
*	6	85-736-XXX	85-736-XXXD	1	BAG
	7	85-527-XXX	85-802A	1	GENERIC MORSE PLB; GPS
	8	85-627-XXX	85-802A	1	GENERIC MORSE PLB; NON GPS
	9	85-726	85-726D	1	TAMPER LABEL
	10	85-727	85-727D	1	TAMPER COVER
	11	85-743	85-743D	1	SCREW M3X6 CSK POZI
	12	85-728	85-728D	1	SCREW 3X20 PAN HEAD SLOTTED
*	13	82-286	82-286D	3	SEALING LABEL
	14	85-733	85-733D	1	TAMPER COVER SEAL
	15	85-739	85-739D	1	ANTENNA RETAINING PIN
	16	90-7002	90-7002	A/R	THREADLOCK LOCTITE 932
	17	90-9012	90-9012	A/R	IPA
	18	85-725	85-725D	2	O RING
	19	85-758	85-758D	1	BATTERY SCREW BLOCK
	20	85-714-XXX	85-714-XXXD	1	FLIP UP COVER
	21	85-734-XXX	85-734-XXXD	1	BUBBLE LABEL
	22	85-769	85-769D	1	LANYARD

NOTE; FOR FULL VARIANT INFORMATION REFER TO FAMILY TREE 85-900F

NOTES;

1. FIT TAMPER COVER SEAL (ITEM 14) TO TAMPER COVER (ITEM 10).
2. ANTENNA MUST BE WOUND SO THAT HOLES ARE IN ALIGNMENT, TO ALLOW THE RETAINING PIN (ITEM 15) TO BE FITTED WHEN THE TAMPER COVER IS IN PLACE. TOOL PART No. 85-753 MAY BE USED. SECURE TAMPER COVER USING SCREW (ITEM 11) AND A SMALL AMOUNT OF THREADLOCK (ITEM 16). SECURE TO A TORQUE OF BETWEEN 20 AND 25cNm. ENSURE THAT THE RETAINING PIN SITS FLUSH (NO MORE THAN 1mm RISE AT ANY POINT).
3. CLEAN THE RECESSED LABEL AREAS OF THE TAMPER COVER, AND THE TOP CASE, WITH IPA (ITEM 17) BEFORE APPLYING HE TAMPER COVER LABEL (ITEM 9).
4. PRESSURE TEST THE PLB ASSY (BATTERY TESTED PREVIOUSLY) TO A PRESSURE 0.5 BAR. CONFIRM THAT THE LEAKAGE RATE IS EQUIVALENT TO LESS THAN 1cc OF WATER PER 24 HOURS. NOTE; A SEAL IS NOT REQUIRED AROUND THE BATTERY PINS.
5. PROGRAMME THE UNIT WITH THE REQUIRED PROTOCOL AND SERIALISATION, AS PER PROGRAMMING GUIDELINES. CUT OUT THE 4OFF PROGRAMMED ID LABELS PRINTED BY THE PROGRAMMING SOFTWARE. APPLY THEM;

a. IN THE SPACE RESERVED FOR THIS PURPOSE ON THE LABEL INNER, ON THE UNDERSIDE OF THE PLB BODY, AND FIT A SEALING LABEL (ITEM 13) TO PROTECT IT.
b. IN THE HANDBOOK, WITH A SEALING LABEL TO PROTECT IT.
c. FOR USCG; ON THE JIFFY BAG, WITH A SEALING LABEL TO PROTECT IT.
d. USE THE OTHER LABEL FOR THE TEST RECORD.

6. BATTERY PACK (ITEM 4 OR 5); REMOVE BLACK TAPE OVER PINS. ENSURING THE O-RINGS (ITEM 18) ARE FITTED IN POSITION, THEN LOCATE BATTERY SCREW BLOCK (ITEM 19 - USCG ONLY) OR LANYARD BLOCK (ITEM 22) INTO SLOT, AND SCREW PACK INTO POSITION USING SCREW M3 (ITEM 12) AND A SMALL AMOUNT OF THREADLOCK (ITEM 16). TORQUE TO BETWEEN 25 AND 30cNm.
7. CLEAN RECESS IN FLIP-UP COVER (ITEM 20) WITH IPA, THEN FIT BUBBLE LABEL (ITEM 21).

ISSUE	CHG. No.	DATE	APPD	ISSUE	CHG. No.	DATE	APPD
1	C2531	16/02/03					

DO NOT SCALE REMOVE ALL BURRS AND SHARP EDGES (UNLESS OTHERWISE STATED)

THIS DOCUMENT IS McMURDO LIMITED COPYRIGHT AND CONTAINS PROPRIETARY OWNED INTELLECTUAL PROPERTY RIGHTS AND CONFIDENTIAL DATA. ALL RIGHTS ARE STRICTLY RESERVED. THE INFORMATION MUST NOT BE USED EXCEPT FOR THE AGREED PURPOSE UNAUTHORISED USE, REPRODUCTION, OR ISSUE TO ANY THIRD PARTY IS NOT PERMITTED WITHOUT THE PRIOR WRITTEN AUTHORITY OF McMURDO LIMITED. THIS DOCUMENT IS TO BE RETURNED TO McMURDO LIMITED WHEN THE AGREED PURPOSE IS FULFILLED.

TOLERANCES UNLESS OTHERWISE STATED			
WHOLE No.	±0.5	ANGULAR DIMS	±
1 DEC PLACE	±0.1		
2 DEC PLACES	±0.05	DRILLED HOLES	±

USED ON

MATERIAL :-

FINISH :-

DIMENSIONS IN :- MM

3RD ANGLE PROJECTION BS 308

DRAWN | CHECKED | RELEASED | SCALE

TITLE: MORSE PLB; GPS AND NON GPS

McMURDO LIMITED
PORTSMOUTH · HAMPSHIRE · ENGLAND

DRAWING No. 86-801A

SHT 1 OF SHT 1

A 2