THIS DRAWING AND ITS DESIGN ARE THE PROPERTY OF PACIFIC CREST CORPORATION. THIS DRAWING IS LOANED TO YOU SUBJECT TO THE CONDITION THAT IT SHALL NOT BE REPRODUCED, COPIED, OR LOANED TO OTHERS EXCEPT WHERE SUCH USE IS INDIRECTLY. IT SHALL NOT BE USED TO FURNISH ANY INFORMATION FOR THE MAKING OF DRAWINGS, PRINTS, OR EQUIPMENT, OR PARTS THEREOF, EXCEPT WHERE OTHERWISE SPECIFICALLY PROVIDED FOR BY CONTRACT WITH PACIFIC CREST CORPORATION.

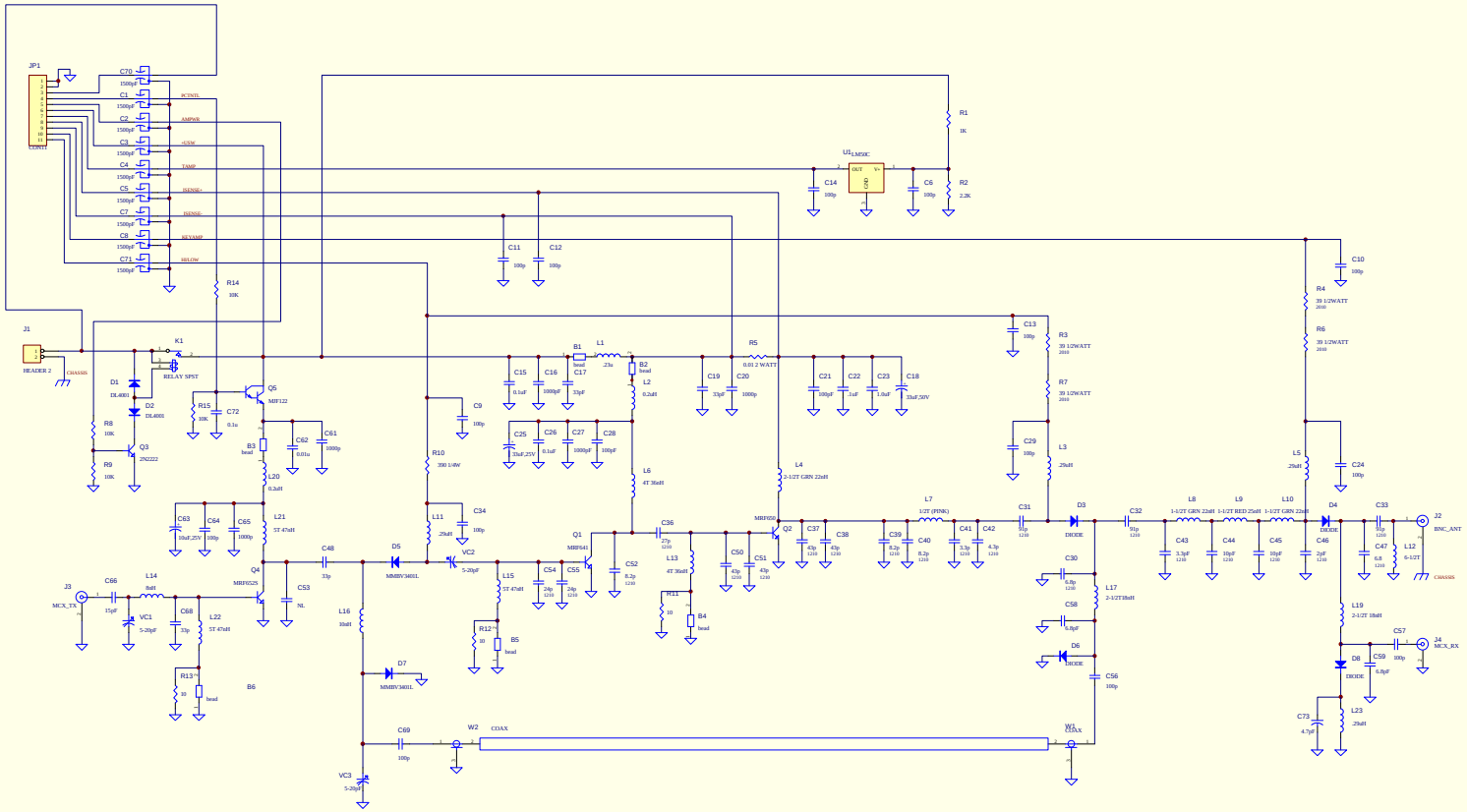

Title: SCHM,PDLBASE,AMP,35W,410-470				PACIFIC CREST CORP. 990 Richard Ave Suite # 110 Santa Clara, CA 95050 USA
Size: D	Number: D00476	Revision: 06		
File: C:\PCC\Kicad\pdl\PDLBase.sch	Date: 7/8/2020	Time: 10:30:30	Sheet 1 of 4	