THIS DOCUMENT AND THE INFORMATION IT DISCLOSES IS THE EXCLUSIVE PROPERTY OF JDI ELECTRONICS FACTORY. ANY REPRODUCTION OR USE OF THIS DRAWING, IN PART OR IN WHOLE, WITHOUT THE EXPRESS CONSENT OF THE PROPRIETER IS PROHIBITED.

		REVISIONS		
ZONE	REV	DESCRIPTION	DATE	ISSUE BY
	A	RELEASING NEW DRAWING	27/FEB-08	TAN
	B	ADD IC NUMBER	5/JAN-09	TAN
	C	CHANGE THE PRINTING.	24/JULY-09	TAN
	D	CHANGE THE PRINTING.	16/OCT-09	TAN
	E	CHANGE THE PRINTING.	9/MAY-11	TAN

WATERPROOF SPRAY COMMANDER(RX) SILKSCREEN POSITION:

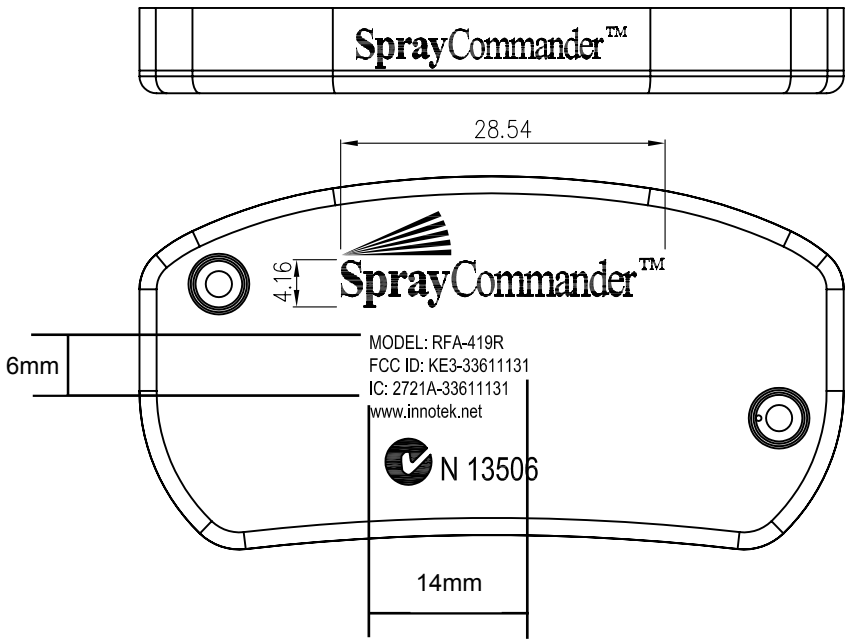

NOTE:
1.FONT IS ARIAL.
2.SILKSCREEN COLOR IS WHITE.

MATERIAL: NYLON 66,BLACK, RoHS.	UNLESS OTHERWISE SPECIFIED ALL DIMENSIONS ARE IN mm/~~INCH~~			JDI ELECTRONICS FACTORY	
	WALL THICKNESS mm/INCH; DRAFT ANGLE/SIDE 1.0 °MAX; BURR & FLASH MAX; BREAK ⊿ CORNERS 0.2 R, MAX	TOLERANCES ON: LINEAR .X ± mm/~~INCH~~; .XX ± 0.05 mm/~~INCH~~; .XXX ± mm/INCH; ANGULAR ± DEGREE	DFTS 9/MAY-11 TAN; CHKR; APPD	TITLE: TOP COVER,FOR WATERPROOF SPRAY COMMANDER.	
TEXTURE: YS1287A	COATING	HARDNESS	DO NOT SCALE DRAWING	SCALE NTS	SHT 2 OF 2

MOLD/DIE NO	PROJECT	PART NO	REV	SIZE
JM070180	#336	336-39063EN		A4