Bottom of EUT
Label Location

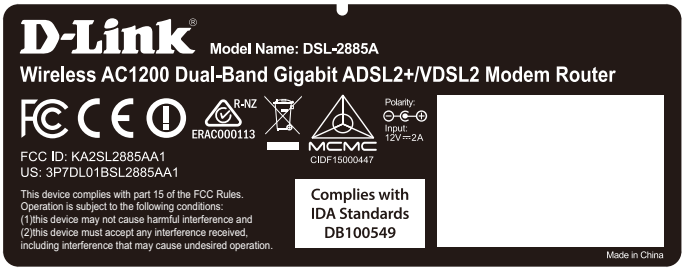
D-Link
Model Name: DSL-2885A
Wireless AC1200 Dual-Band Gigabit ADSL2+/VDSL2 Modem Router
R-NZ
ERAC000113
MCMC
CIDF15000447
Polarity:
Input:
12V ⎓ 2A
FCC ID: KA2SL2885AA1
US: 3P7DL01BSL2885AA1
This device complies with part 15 of the FCC Rules.
Operation is subject to the following conditions:
(1)this device may not cause harmful interference and
(2)this device must accept any interference received,
including interference that may cause undesired operation.
Complies with
IDA Standards
DB100549
Made in China

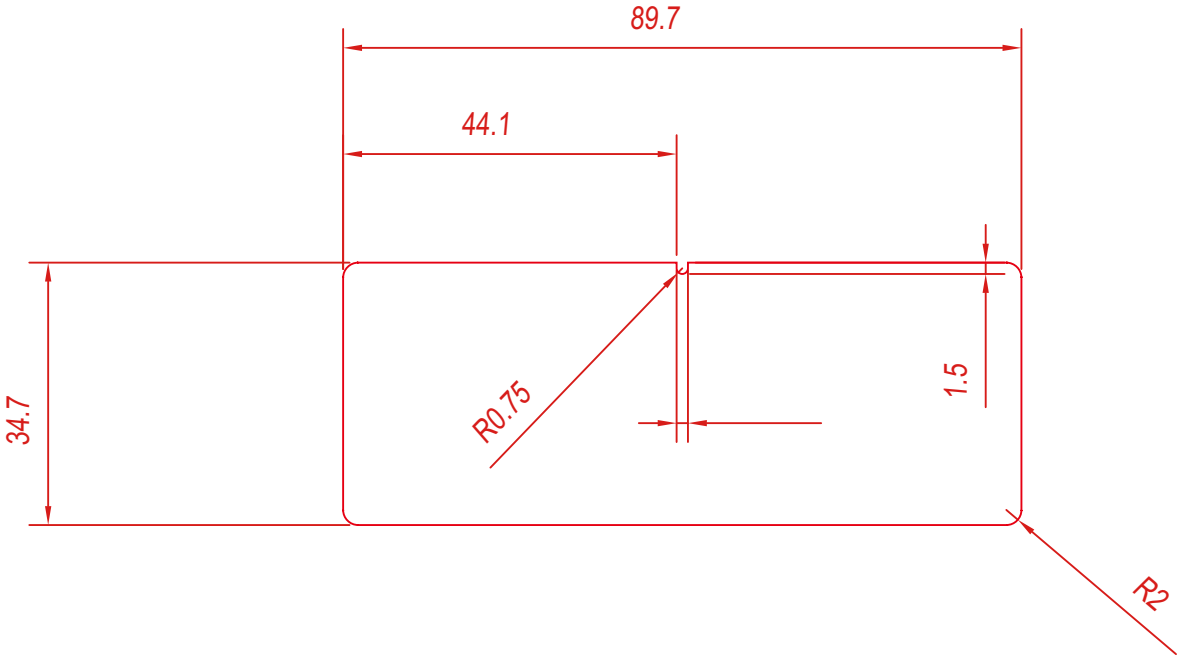
89.7
44.1
34.7
R0.75
1.5
R2