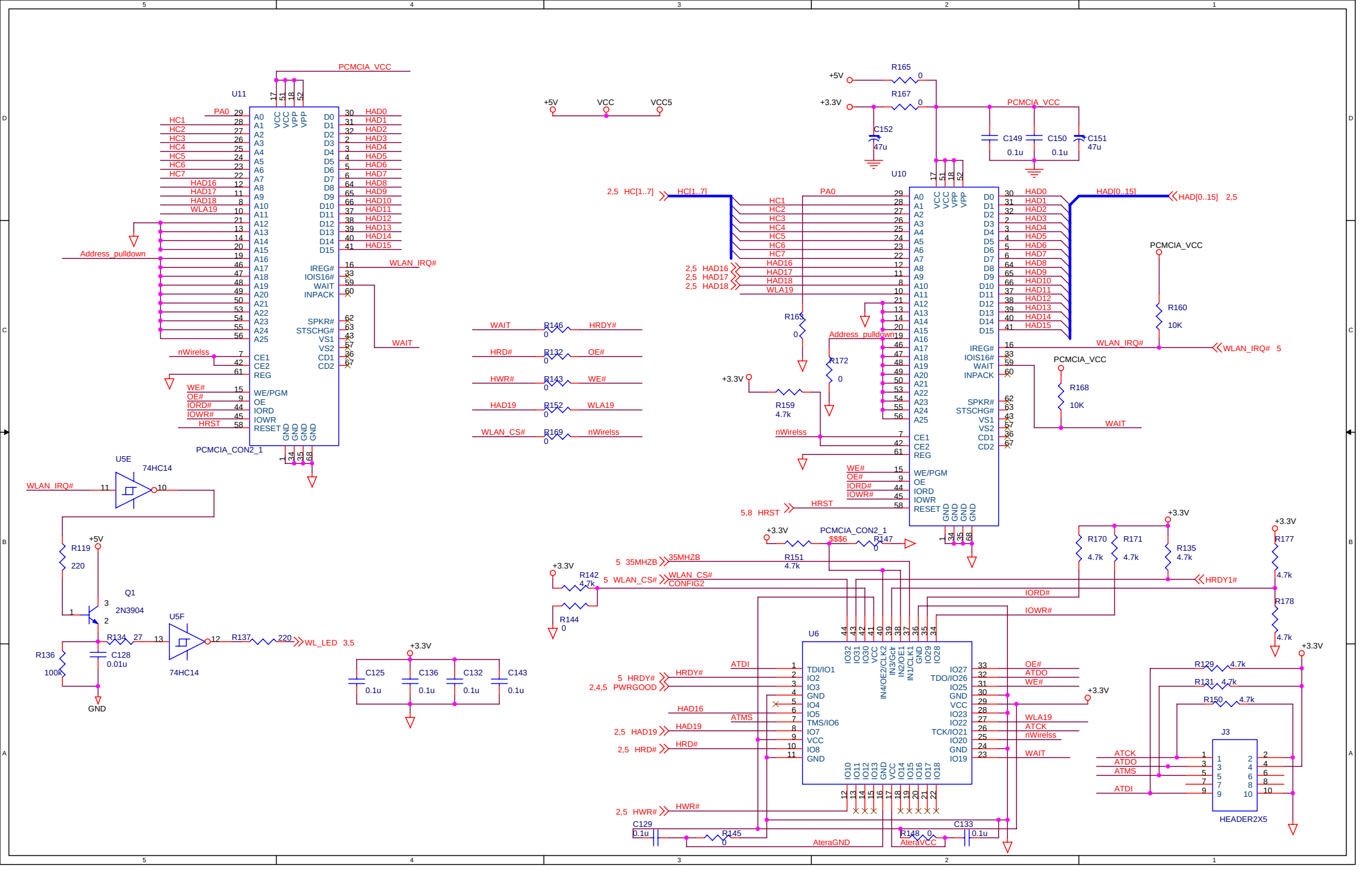
U11
PCMCIA_CON2_1
PCMCIA_VCC
Address_pulldown
WLAN_IRQ#
WAIT
nWirelss
WE#
OE#
IORD#
IOWR#
HRST
U5E
74HC14
R119
220
+5V
Q1
2N3904
R134
27
R136
100K
C128
0.01u
GND
U5F
74HC14
R137
220
WL_LED 3,5
+3.3V
C125
C136
C132
C143
0.1u
VCC
VCC5
R146
R132
R143
R152
R169
HRDY#
OE#
WE#
WLA19
nWirelss
R165
R167
C152
47u
C149
C150
C151
U10
HC[1..7]
HAD[0..15]
R163
R172
R159
4.7k
R160
10K
R168
10K
R151
4.7k
R142
4.7k
R144
R147
R170
R171
R135
4.7k
R177
R178
HRDY1#
U6
TDI/IO1
IO2
IO3
GND
IO4
IO5
TMS/IO6
IO7
VCC
IO8
GND
IO27
TDO/IO26
IO25
GND
VCC
IO23
IO22
TCK/IO21
IO20
GND
IO19
ATDI
HRDY#
PWRGOOD
HAD16
ATMS
HAD19
HRD#
HWR#
ATDO
WLA19
ATCK
nWirelss
WAIT
C129
0.1u
R145
AteraGND
R148
AteraVCC
C133
0.1u
R129
R131
R150
J3
HEADER2X5

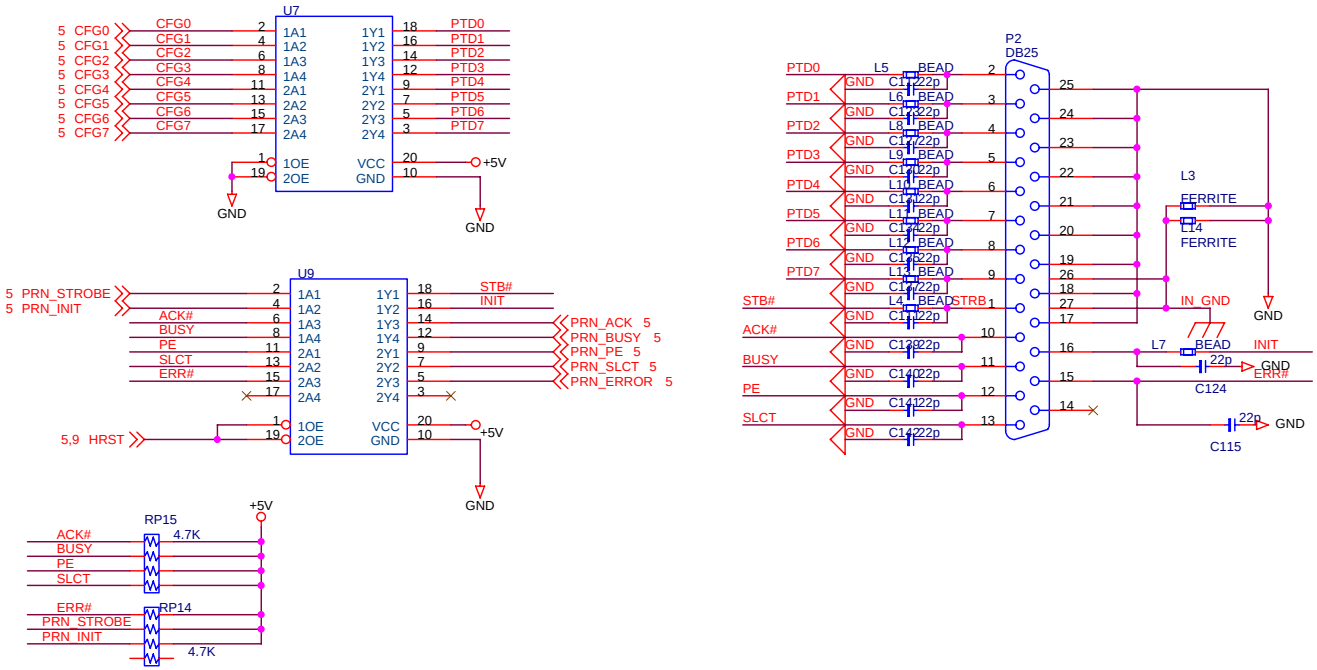
U7
5 CFG0
5 CFG1
5 CFG2
5 CFG3
5 CFG4
5 CFG5
5 CFG6
5 CFG7
CFG0
CFG1
CFG2
CFG3
CFG4
CFG5
CFG6
CFG7
1A1
1A2
1A3
1A4
2A1
2A2
2A3
2A4
1Y1
1Y2
1Y3
1Y4
2Y1
2Y2
2Y3
2Y4
PTD0
PTD1
PTD2
PTD3
PTD4
PTD5
PTD6
PTD7
1OE
2OE
VCC
GND
+5V
GND
GND
U9
5 PRN_STROBE
5 PRN_INIT
ACK#
BUSY
PE
SLCT
ERR#
STB#
INIT
PRN_ACK 5
PRN_BUSY 5
PRN_PE 5
PRN_SLCT 5
PRN_ERROR 5
5,9 HRST
+5V
GND
RP15
4.7K
ACK#
BUSY
PE
SLCT
ERR#
PRN_STROBE
PRN_INIT
RP14
4.7K
+5V
P2
DB25
PTD0
PTD1
PTD2
PTD3
PTD4
PTD5
PTD6
PTD7
STB#
ACK#
BUSY
PE
SLCT
L5 BEAD
L6 BEAD
L8 BEAD
L9 BEAD
L10 BEAD
L11 BEAD
L12 BEAD
L13 BEAD
L4 BEAD
STRB
GND
C11 22p
C12 22p
C13 22p
C14 22p
L3
FERRITE
L14
FERRITE
IN_GND
GND
L7 BEAD
22p
INIT
ERR#
C124
22p
C115
GND

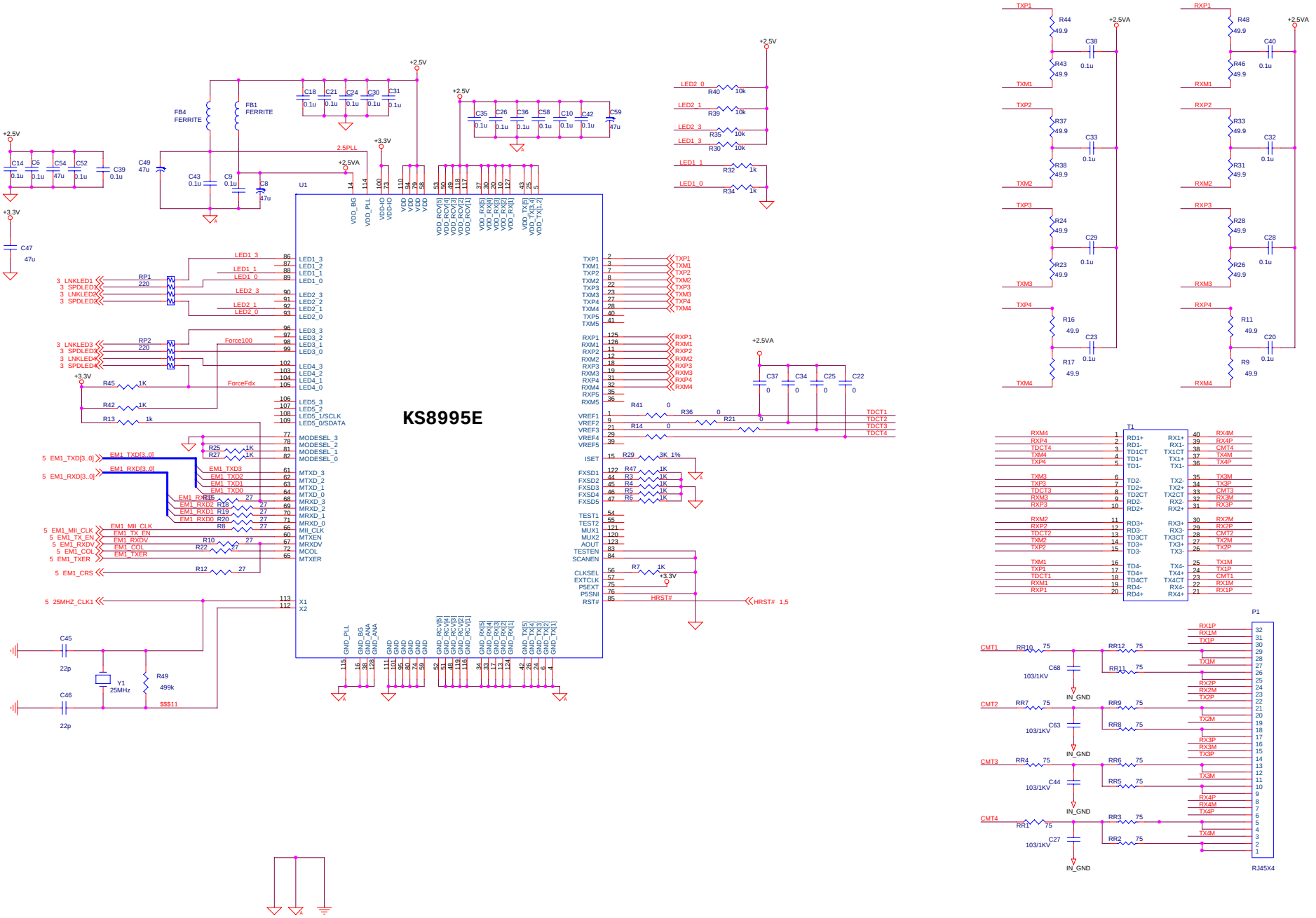
KS8995E
U1
FB4 FERRITE
FB1 FERRITE
2.5PLL
+2.5V
+2.5VA
+3.3V
LED2_0
LED2_1
LED2_3
LED1_3
LED1_1
LED1_0
LED1_1
LED1_0
LED2_3
LED2_1
LED2_0
LED3_3
LED3_2
LED3_1
LED3_0
LED4_3
LED4_2
LED4_1
LED4_0
LED5_3
LED5_2
LED5_1/SCLK
LED5_0/SDATA
Force100
ForceFdx
MODESEL_3
MODESEL_2
MODESEL_1
MODESEL_0
MTXD_3
MTXD_2
MTXD_1
MTXD_0
MRXD_3
MRXD_2
MRXD_1
MRXD_0
MII_CLK
MTXEN
MRXDV
MCOL
MTXER
X1
X2
TXP1
TXM1
TXP2
TXM2
TXP3
TXM3
TXP4
TXM4
TXP5
TXM5
RXP1
RXM1
RXP2
RXM2
RXP3
RXM3
RXP4
RXM4
RXP5
RXM5
VREF1
VREF2
VREF3
VREF4
VREF5
ISET
FXSD1
FXSD2
FXSD3
FXSD4
FXSD5
TEST1
TEST2
MUX1
MUX2
AOUT
TESTEN
SCANEN
CLKSEL
EXTCLK
P5EXT
P5SNI
RST#
HRST#
TDCT1
TDCT2
TDCT3
TDCT4
EM1_TXD[3..0]
EM1_RXD[3..0]
EM1_MII_CLK
EM1_TX_EN
EM1_RXDV
EM1_COL
EM1_TXER
EM1_CRS
25MHZ_CLK1
Y1 25MHz
C45 22p
C46 22p
R49 499k
$$$11
T1
P1
RJ45X4
IN_GND

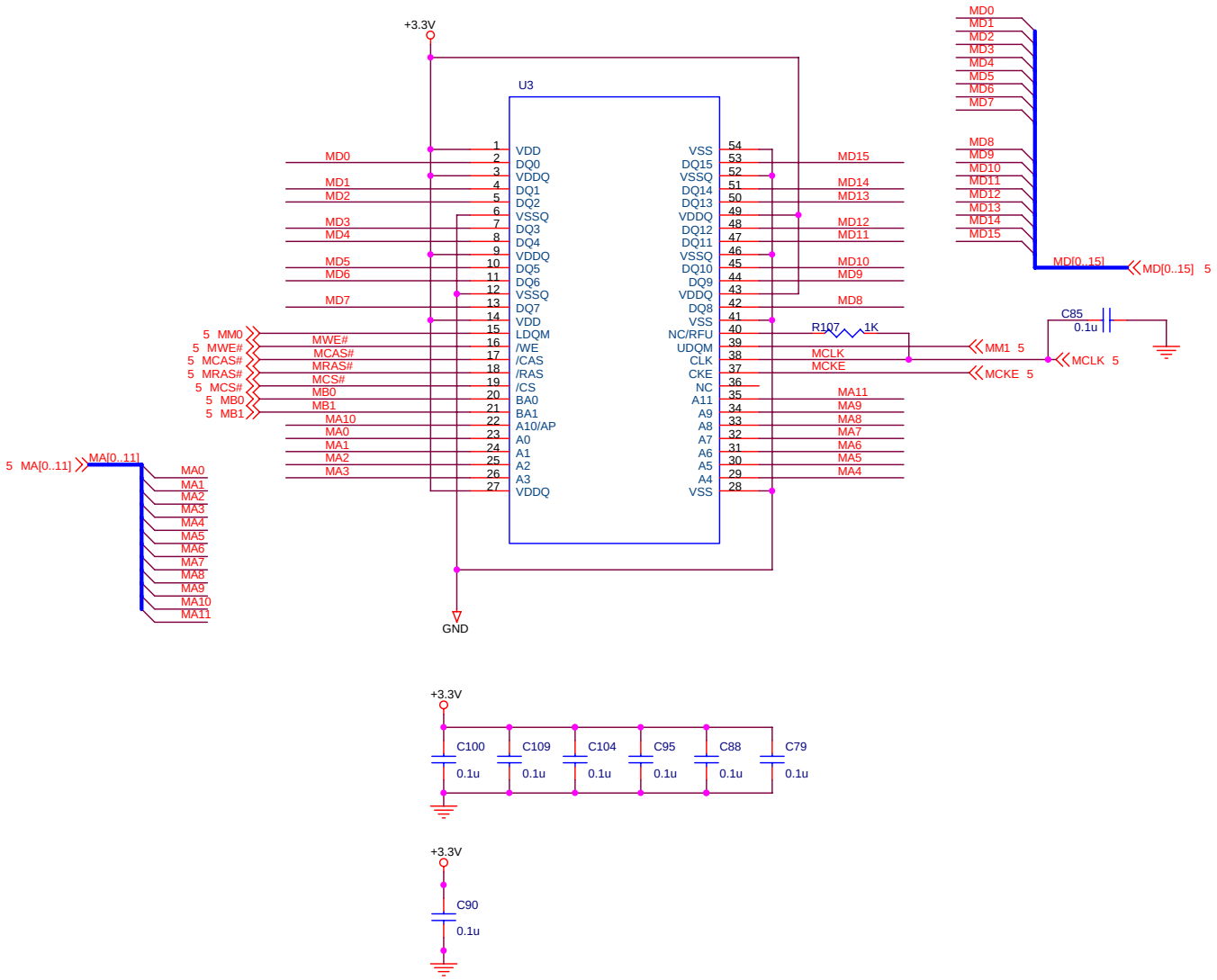
U3
+3.3V
GND
VDD
DQ0
VDDQ
DQ1
DQ2
VSSQ
DQ3
DQ4
VDDQ
DQ5
DQ6
VSSQ
DQ7
VDD
LDQM
/WE
/CAS
/RAS
/CS
BA0
BA1
A10/AP
A0
A1
A2
A3
VDDQ
VSS
DQ15
VSSQ
DQ14
DQ13
VDDQ
DQ12
DQ11
VSSQ
DQ10
DQ9
VDDQ
DQ8
VSS
NC/RFU
UDQM
CLK
CKE
NC
A11
A9
A8
A7
A6
A5
A4
VSS
MD0
MD1
MD2
MD3
MD4
MD5
MD6
MD7
MD8
MD9
MD10
MD11
MD12
MD13
MD14
MD15
MD[0..15]
MD[0..15] 5
MWE#
MCAS#
MRAS#
MCS#
MB0
MB1
MA10
MA0
MA1
MA2
MA3
5 MM0
5 MWE#
5 MCAS#
5 MRAS#
5 MCS#
5 MB0
5 MB1
5 MA[0..11]
MA[0..11]
MA0
MA1
MA2
MA3
MA4
MA5
MA6
MA7
MA8
MA9
MA10
MA11
MCLK
MCKE
R107
1K
MM1 5
MCLK 5
MCKE 5
C85
0.1u
C100
C109
C104
C95
C88
C79
0.1u
C90

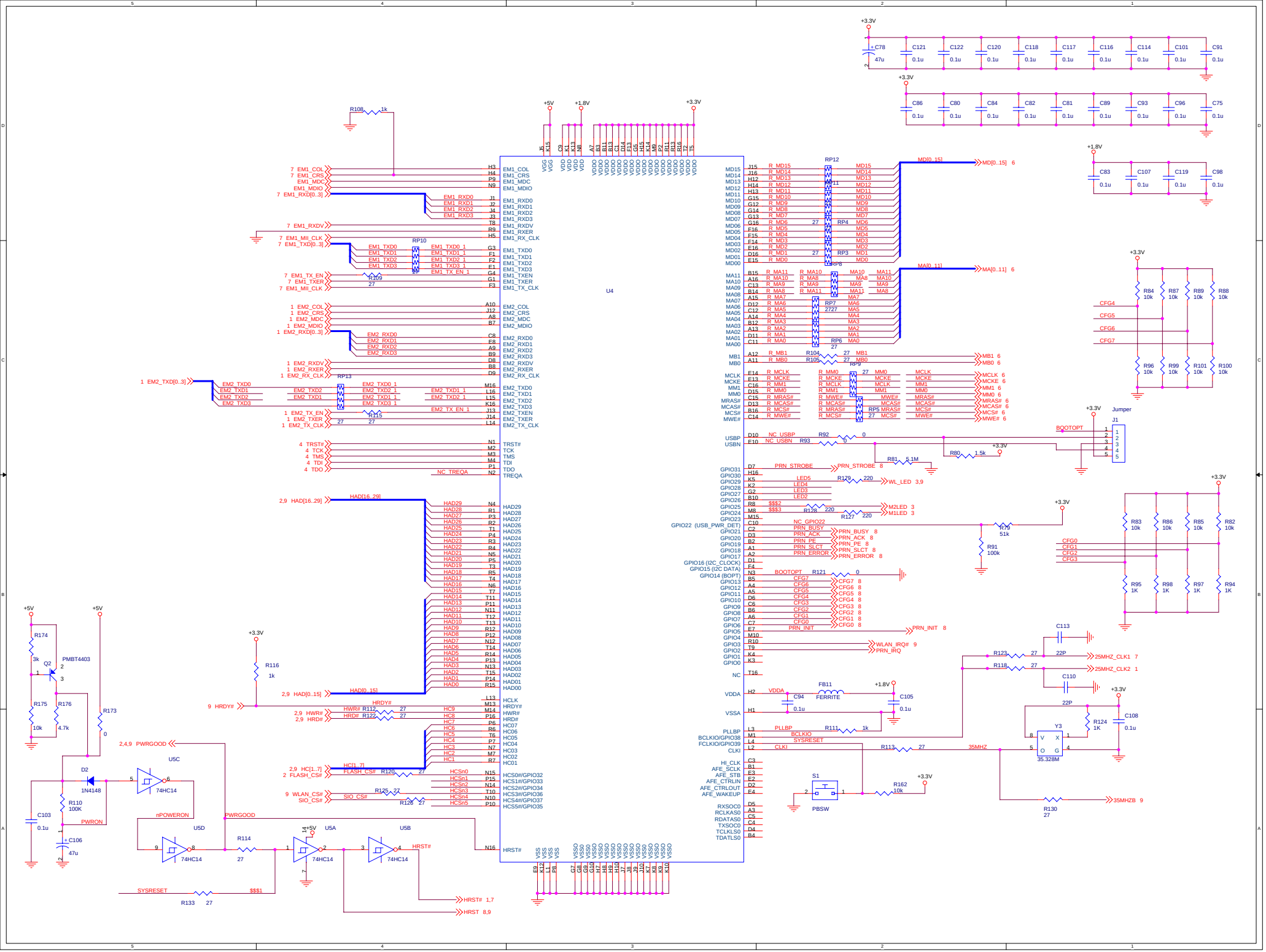
U4
EM1_COL
EM1_CRS
EM1_MDC
EM1_MDIO
EM1_RXD0
EM1_RXD1
EM1_RXD2
EM1_RXD3
EM1_RXDV
EM1_RXER
EM1_RX_CLK
EM1_TXD0
EM1_TXD1
EM1_TXD2
EM1_TXD3
EM1_TXEN
EM1_TXER
EM1_TX_CLK
EM2_COL
EM2_CRS
EM2_MDC
EM2_MDIO
EM2_RXD0
EM2_RXD1
EM2_RXD2
EM2_RXD3
EM2_RXDV
EM2_RXER
EM2_RX_CLK
EM2_TXD0
EM2_TXD1
EM2_TXD2
EM2_TXD3
EM2_TXEN
EM2_TXER
EM2_TX_CLK
TRST#
TCK
TMS
TDI
TDO
TREQA
HAD29
HAD28
HAD27
HAD26
HAD25
HAD24
HAD23
HAD22
HAD21
HAD20
HAD19
HAD18
HAD17
HAD16
HAD15
HAD14
HAD13
HAD12
HAD11
HAD10
HAD9
HAD8
HAD7
HAD6
HAD5
HAD4
HAD3
HAD2
HAD1
HAD0
HCLK
HRDY#
HWR#
HRD#
HC07
HC06
HC05
HC04
HC03
HC02
HC01
HCS0#/GPIO32
HCS1#/GPIO33
HCS2#/GPIO34
HCS3#/GPIO36
HCS4#/GPIO37
HCS5#/GPIO35
HRST#
MD15
MD14
MD13
MD12
MD11
MD10
MD09
MD08
MD07
MD06
MD05
MD04
MD03
MD02
MD01
MD00
MA11
MA10
MA09
MA08
MA07
MA06
MA05
MA04
MA03
MA02
MA01
MA00
MB1
MB0
MCLK
MCKE
MM1
MM0
MRAS#
MCAS#
MCS#
MWE#
USBP
USBN
GPIO31
GPIO30
GPIO29
GPIO28
GPIO27
GPIO26
GPIO25
GPIO24
GPIO23
GPIO22 (USB_PWR_DET)
GPIO21
GPIO20
GPIO19
GPIO18
GPIO17
GPIO16 (I2C_CLOCK)
GPIO15 (I2C DATA)
GPIO14 (BOPT)
GPIO13
GPIO12
GPIO11
GPIO10
GPIO9
GPIO8
GPIO7
GPIO6
GPIO5
GPIO4
GPIO3
GPIO2
GPIO1
GPIO0
NC
VDDA
VSSA
PLLBP
BCLKIO/GPIO38
FCLKIO/GPIO39
CLKI
HI_CLK
AFE_SCLK
AFE_STB
AFE_CTRLIN
AFE_CTRLOUT
AFE_WAKEUP
RXSOC0
RCLKAS0
RDATAS0
TXSOC0
TCLKLS0
TDATLS0
VDDO
VSSO
VDD
VSS
VGG
+5V
+1.8V
+3.3V
MD[0..15]
MA[0..11]
MB1
MB0
MCLK
MCKE
MM1
MM0
MRAS#
MCAS#
MCS#
MWE#
WL_LED
M2LED
M1LED
PRN_STROBE
PRN_BUSY
PRN_ACK
PRN_PE
PRN_SLCT
PRN_ERROR
PRN_INIT
WLAN_IRQ#
PRN_IRQ
25MHZ_CLK1
25MHZ_CLK2
35MHZ
35MHZB
BOOTOPT
CFG0
CFG1
CFG2
CFG3
CFG4
CFG5
CFG6
CFG7
PWRGOOD
nPOWERON
PWRON
SYSRESET
$$$1
HRST#
HRDY#
HWR#
HRD#
HC[1..7]
FLASH_CS#
WLAN_CS#
SIO_CS#
HAD[16..29]
HAD[0..15]
EM1_TXD0_1
EM1_TXD1_1
EM1_TXD2_1
EM1_TXD3_1
EM1_TX_EN_1
EM2_TXD0_1
EM2_TXD1_1
EM2_TXD2_1
EM2_TXD3_1
EM2_TX_EN_1
EM2_TXD[0..3]
EM1_RXD[0..3]
EM1_TXD[0..3]
EM2_RXD[0..3]
EM2_TXD[0..3]
NC_TREQA
NC_USBP
NC_USBN
NC_GPIO22
BCLKIO
SYSRESET
CLKI
PLLBP
$$$2
$$$3
R108 1k
R109 27
R115 27
R133 27
R116 1k
R173 0
R174 3k
R175 10k
R176 4.7k
R110 100K
R114 27
R120 27
R125 27
R126 27
R112 27
R122 27
R104 27
R105 27
R92 0
R93 0
R81 5.1M
R80 1.5k
R179 220
R128 220
R127 220
R119 51k
R91 100k
R121 0
R123 27
R118 27
R111 1k
R113 27
R162 10k
R130 27
R124 1K
C78 47u
C121 0.1u
C122 0.1u
C120 0.1u
C118 0.1u
C117 0.1u
C116 0.1u
C114 0.1u
C101 0.1u
C91 0.1u
C86 0.1u
C80 0.1u
C84 0.1u
C82 0.1u
C81 0.1u
C89 0.1u
C93 0.1u
C96 0.1u
C75 0.1u
C83 0.1u
C107 0.1u
C119 0.1u
C98 0.1u
C94 0.1u
C105 0.1u
C103 0.1u
C106 47u
C113
C110
C108 0.1u
FB11 FERRITE
Q2 PMBT4403
D2 1N4148
U5C 74HC14
U5D 74HC14
U5A 74HC14
U5B 74HC14
Y3 35.328M
S1 PBSW
J1 Jumper
R84 10k
R87 10k
R89 10k
R88 10k
R96 10k
R99 10k
R101 10k
R100 10k
R83 10k
R86 10k
R85 10k
R82 10k
R95 1K
R98 1K
R97 1K
R94 1K

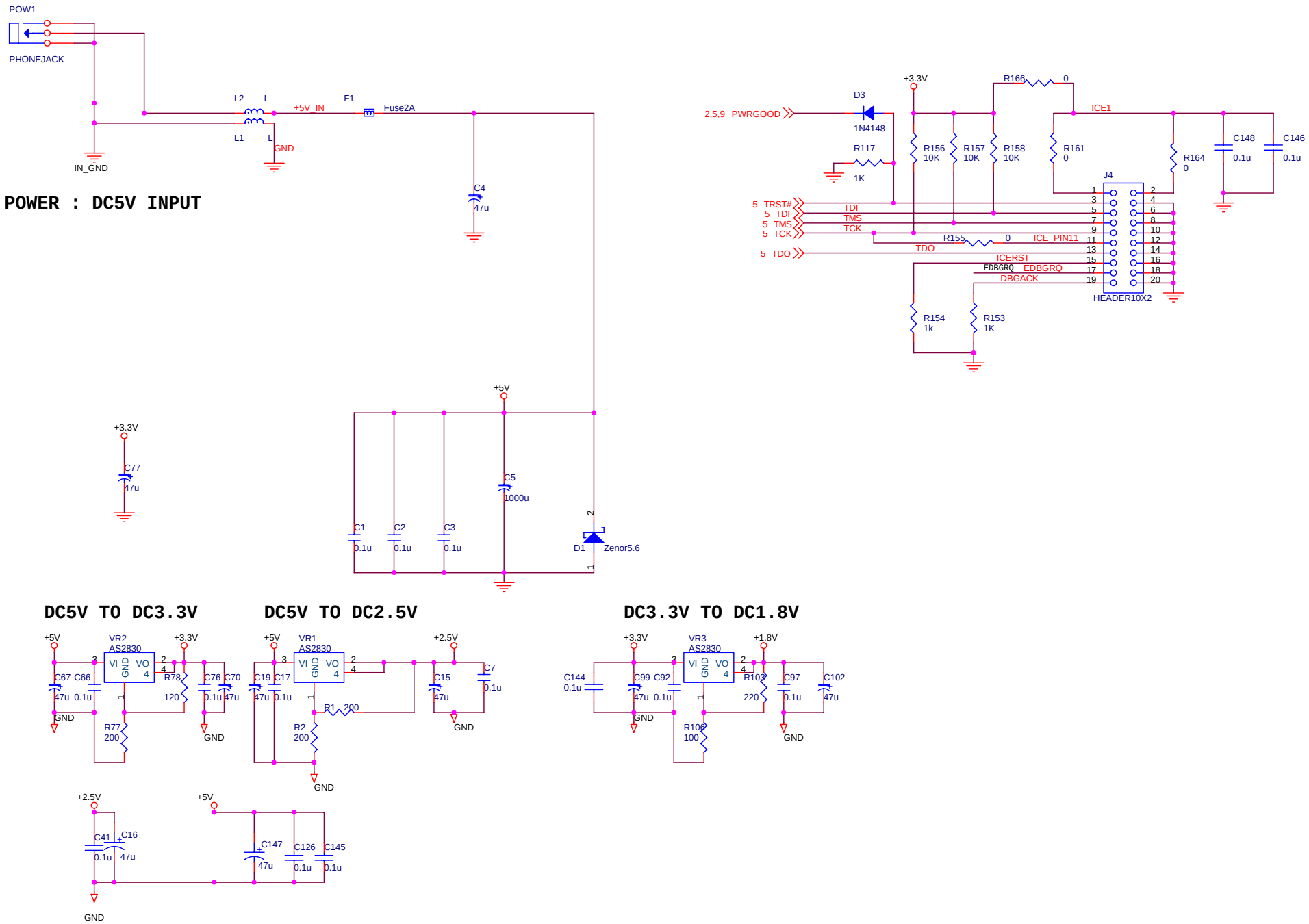
POW1
PHONEJACK
IN_GND
L2
L
L1
L
+5V_IN
F1
Fuse2A
GND
C4
47u
POWER : DC5V INPUT
+3.3V
C77
47u
+5V
C1
0.1u
C2
0.1u
C3
0.1u
C5
1000u
D1
Zenor5.6
2,5,9 PWRGOOD
D3
1N4148
R117
1K
+3.3V
R156
10K
R157
10K
R158
10K
R166
0
ICE1
R161
0
R164
0
C148
0.1u
C146
0.1u
J4
HEADER10X2
5 TRST#
5 TDI
5 TMS
5 TCK
5 TDO
TDI
TMS
TCK
TDO
R155
0
ICE_PIN11
ICERST
EDBGRQ
EDBGRQ
DBGACK
R154
1k
R153
1K
DC5V TO DC3.3V
+5V
VR2
AS2830
+3.3V
VI
GND
VO
C67
47u
C66
0.1u
R78
120
C76
0.1u
C70
47u
R77
200
GND
DC5V TO DC2.5V
+5V
VR1
AS2830
+2.5V
C19
47u
C17
0.1u
R1
200
R2
200
C15
47u
C7
0.1u
GND
DC3.3V TO DC1.8V
+3.3V
VR3
AS2830
+1.8V
C144
0.1u
C99
47u
C92
0.1u
R103
220
C97
0.1u
C102
47u
R106
100
GND
+2.5V
C41
0.1u
C16
47u
+5V
C147
47u
C126
0.1u
C145
0.1u
GND

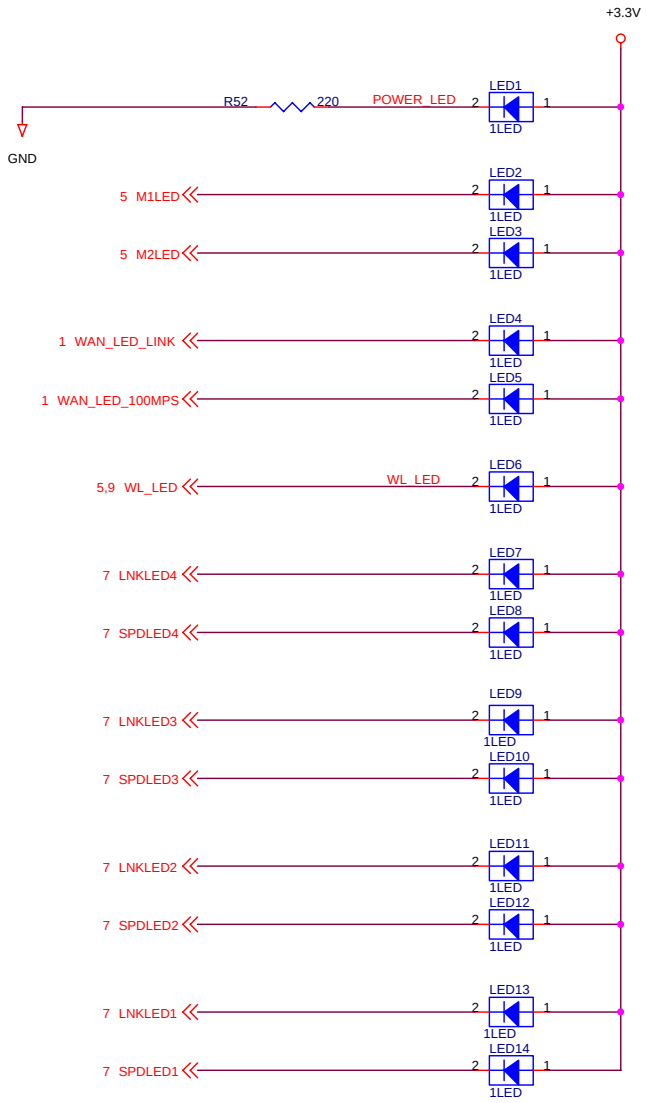
+3.3V
GND
R52
220
POWER_LED
LED1
1LED
5 M1LED
LED2
1LED
5 M2LED
LED3
1LED
1 WAN_LED_LINK
LED4
1LED
1 WAN_LED_100MPS
LED5
1LED
5,9 WL_LED
WL_LED
LED6
1LED
7 LNKLED4
LED7
1LED
7 SPDLED4
LED8
1LED
7 LNKLED3
LED9
1LED
7 SPDLED3
LED10
1LED
7 LNKLED2
LED11
1LED
7 SPDLED2
LED12
1LED
7 LNKLED1
LED13
1LED
7 SPDLED1
LED14
1LED

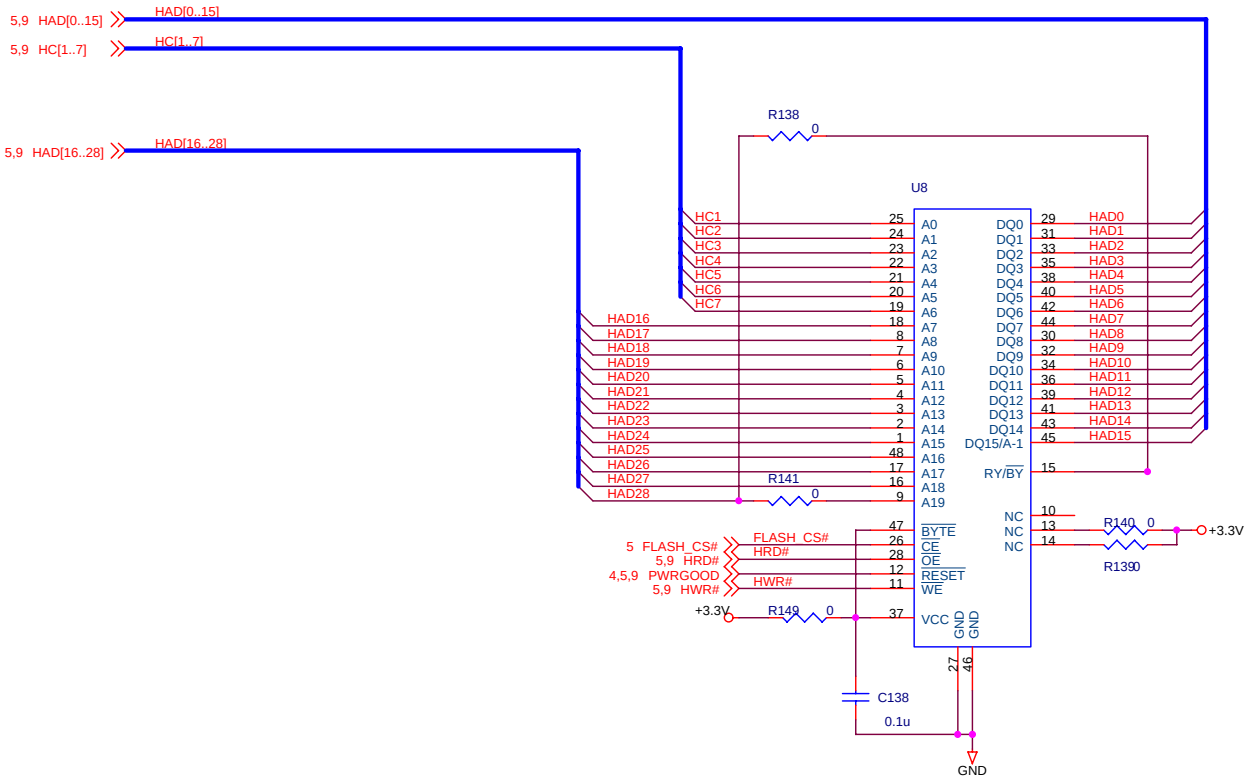
5,9 HAD[0..15]
HAD[0..15]
5,9 HC[1..7]
HC[1..7]
5,9 HAD[16..28]
HAD[16..28]
R138
0
U8
HC1
HC2
HC3
HC4
HC5
HC6
HC7
HAD16
HAD17
HAD18
HAD19
HAD20
HAD21
HAD22
HAD23
HAD24
HAD25
HAD26
HAD27
HAD28
R141
0
A0
A1
A2
A3
A4
A5
A6
A7
A8
A9
A10
A11
A12
A13
A14
A15
A16
A17
A18
A19
BYTE
CE
OE
RESET
WE
VCC
GND
GND
DQ0
DQ1
DQ2
DQ3
DQ4
DQ5
DQ6
DQ7
DQ8
DQ9
DQ10
DQ11
DQ12
DQ13
DQ14
DQ15/A-1
RY/BY
NC
NC
NC
HAD0
HAD1
HAD2
HAD3
HAD4
HAD5
HAD6
HAD7
HAD8
HAD9
HAD10
HAD11
HAD12
HAD13
HAD14
HAD15
R140
0
R139
0
+3.3V
5 FLASH_CS#
FLASH_CS#
5,9 HRD#
HRD#
4,5,9 PWRGOOD
5,9 HWR#
HWR#
+3.3V
R149
0
C138
0.1u
GND

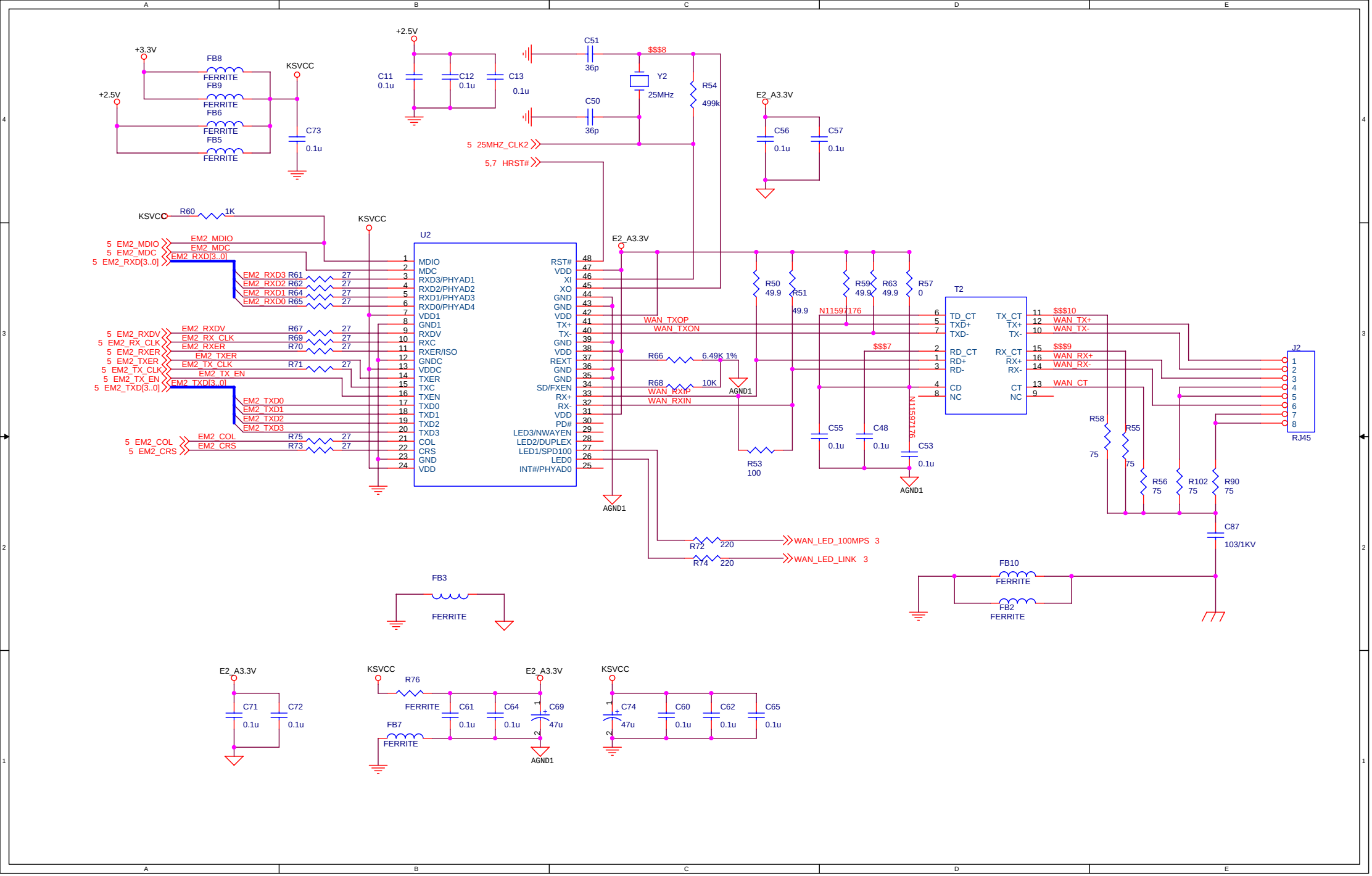
+3.3V
FB8
FERRITE
FB9
FERRITE
FB6
FERRITE
FB5
FERRITE
+2.5V
KSVCC
C73
0.1u
+2.5V
C11
0.1u
C12
0.1u
C13
0.1u
C51
36p
C50
36p
$$$8
Y2
25MHz
R54
499k
5 25MHZ_CLK2
5,7 HRST#
E2_A3.3V
C56
0.1u
C57
0.1u
KSVCC
R60
1K
KSVCC
U2
5 EM2_MDIO
5 EM2_MDC
5 EM2_RXD[3..0]
EM2_MDIO
EM2_MDC
EM2_RXD[3..0]
EM2_RXD3 R61 27
EM2_RXD2 R62 27
EM2_RXD1 R64 27
EM2_RXD0 R65 27
5 EM2_RXDV
5 EM2_RX_CLK
5 EM2_RXER
5 EM2_TXER
5 EM2_TX_CLK
5 EM2_TX_EN
5 EM2_TXD[3..0]
EM2_RXDV R67 27
EM2_RX_CLK R69 27
EM2_RXER R70 27
EM2_TXER
EM2_TX_CLK R71 27
EM2_TX_EN
EM2_TXD[3..0]
EM2_TXD0
EM2_TXD1
EM2_TXD2
EM2_TXD3
5 EM2_COL
5 EM2_CRS
EM2_COL R75 27
EM2_CRS R73 27
MDIO
MDC
RXD3/PHYAD1
RXD2/PHYAD2
RXD1/PHYAD3
RXD0/PHYAD4
VDD1
GND1
RXDV
RXC
RXER/ISO
GNDC
VDDC
TXER
TXC
TXEN
TXD0
TXD1
TXD2
TXD3
COL
CRS
GND
VDD
RST#
VDD
XI
XO
GND
GND
VDD
TX+
TX-
GND
VDD
REXT
GND
GND
SD/FXEN
RX+
RX-
VDD
PD#
LED3/NWAYEN
LED2/DUPLEX
LED1/SPD100
LED0
INT#/PHYAD0
E2_A3.3V
AGND1
WAN_TXOP
WAN_TXON
R66 6.49K 1%
R68 10K
WAN_RXIP
WAN_RXIN
R53
100
R50
49.9
R51
49.9
R59
49.9
R63
49.9
R57
0
N11597176
$$$7
C55
0.1u
C48
0.1u
C53
0.1u
AGND1
T2
TD_CT
TXD+
TXD-
RD_CT
RD+
RD-
CD
NC
TX_CT
TX+
TX-
RX_CT
RX+
RX-
CT
NC
$$$10
WAN_TX+
WAN_TX-
$$$9
WAN_RX+
WAN_RX-
WAN_CT
J2
RJ45
R58
75
R55
75
R56
75
R102
75
R90
75
C87
103/1KV
R72 220
R74 220
WAN_LED_100MPS 3
WAN_LED_LINK 3
FB10
FERRITE
FB2
FERRITE
FB3
FERRITE
E2_A3.3V
C71
0.1u
C72
0.1u
KSVCC
R76
FERRITE
C61
0.1u
C64
0.1u
C69
47u
FB7
FERRITE
AGND1
E2_A3.3V
KSVCC
C74
47u
C60
0.1u
C62
0.1u
C65
0.1u