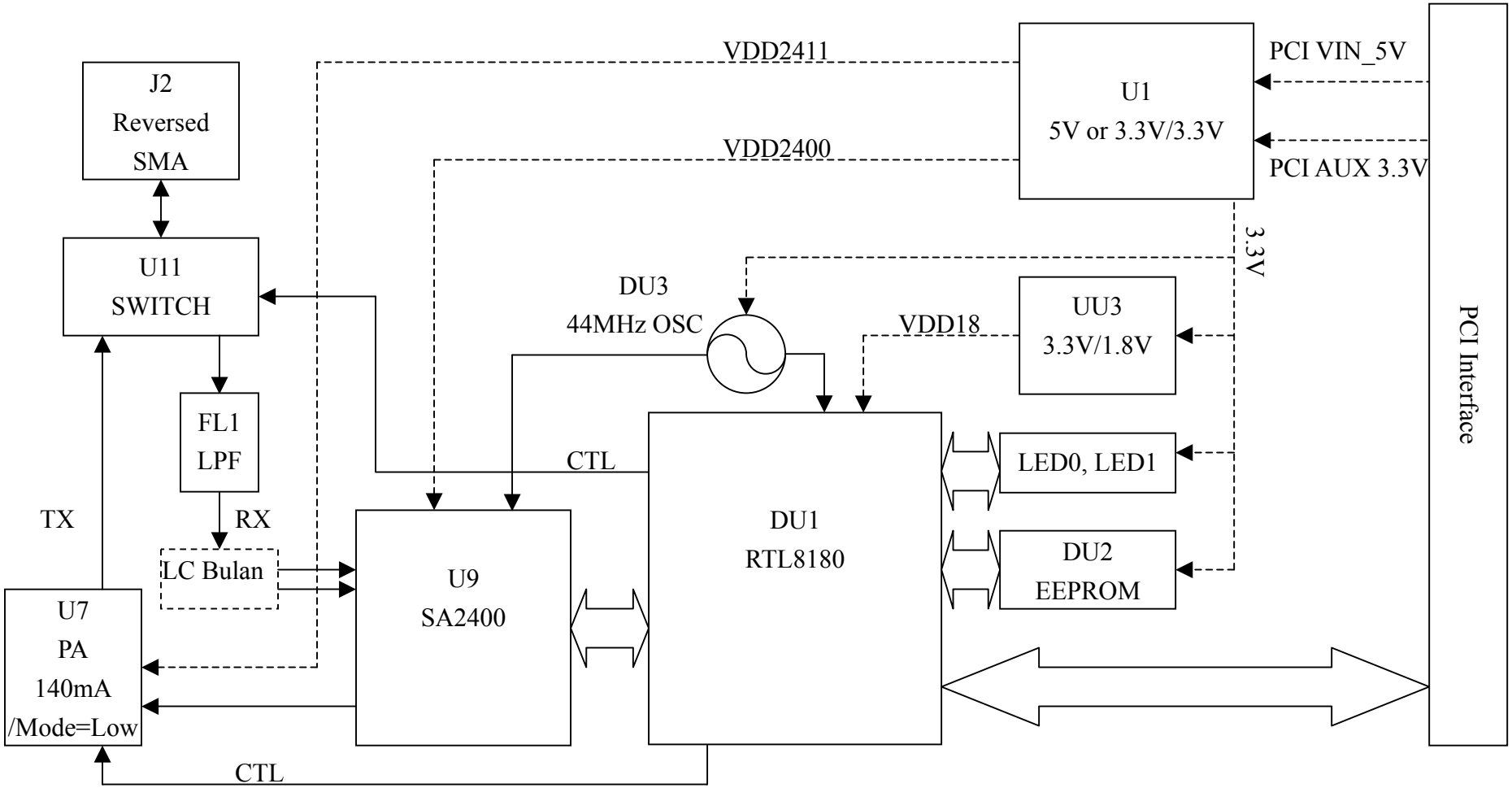PHILIPS+REALTEK PCI BLOCK DIAGRAM AND POWER TREE