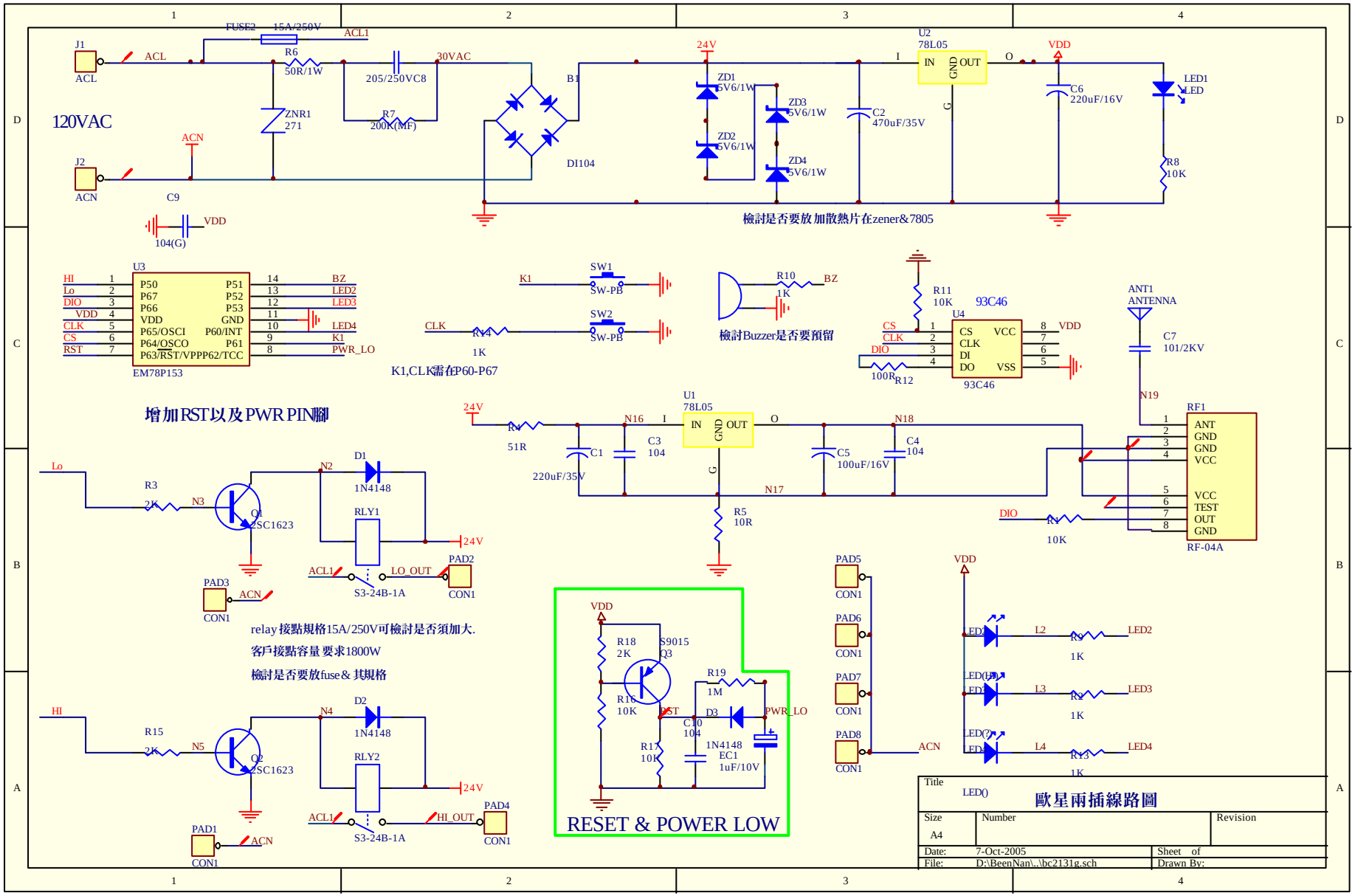
120VAC
J1
ACL
J2
ACN
FUSE2
15A/250V
ACL1
R6
50R/1W
ZNR1
271
205/250VC8
R7
200K(MF)
30VAC
B1
DI104
C9
104(G)
VDD
24V
ZD1
5V6/1W
ZD2
5V6/1W
ZD3
5V6/1W
ZD4
5V6/1W
C2
470uF/35V
U2
78L05
IN
OUT
GND
C6
220uF/16V
LED1
LED
R8
10K
檢討是否要放加散熱片在zener&7805
U3
EM78P153
P50
P67
P66
VDD
P65/OSCI
P64/OSCO
P63/RST/VPPP62/TCC
P51
P52
P53
GND
P60/INT
P61
HI
Lo
DIO
CLK
CS
RST
BZ
LED2
LED3
LED4
K1
PWR_LO
SW1
SW-PB
SW2
R14
1K
K1,CLK需在P60-P67
R10
1K
檢討Buzzer是否要預留
R11
10K
93C46
U4
CS
CLK
DI
DO
VCC
VSS
R12
100R
ANT1
ANTENNA
C7
101/2KV
N19
增加RST以及PWR PIN腳
R4
51R
C1
220uF/35V
N16
C3
104
U1
78L05
N18
C5
100uF/16V
C4
104
N17
R5
10R
RF1
RF-04A
ANT
GND
VCC
TEST
OUT
R1
10K
R3
2K
N3
Q1
2SC1623
N2
D1
1N4148
RLY1
24V
ACL1
LO_OUT
S3-24B-1A
PAD2
CON1
PAD3
ACN
relay接點規格15A/250V可檢討是否須加大.
客戶接點容量要求1800W
檢討是否要放fuse&其規格
R15
N5
Q2
2SC1623
N4
D2
1N4148
RLY2
HI_OUT
PAD4
PAD1
R18
2K
S9015
Q3
R16
10K
R17
10K
R19
1M
C10
104
D3
1N4148
EC1
1uF/10V
RESET & POWER LOW
PAD5
PAD6
PAD7
PAD8
L2
L3
L4
R9
R12
R13
1K
Title
LED()
歐星兩插線路圖
Size
A4
Number
Revision
Date:
7-Oct-2005
File:
D:\BeenNan\..\bc2131g.sch
Sheet of
Drawn By: