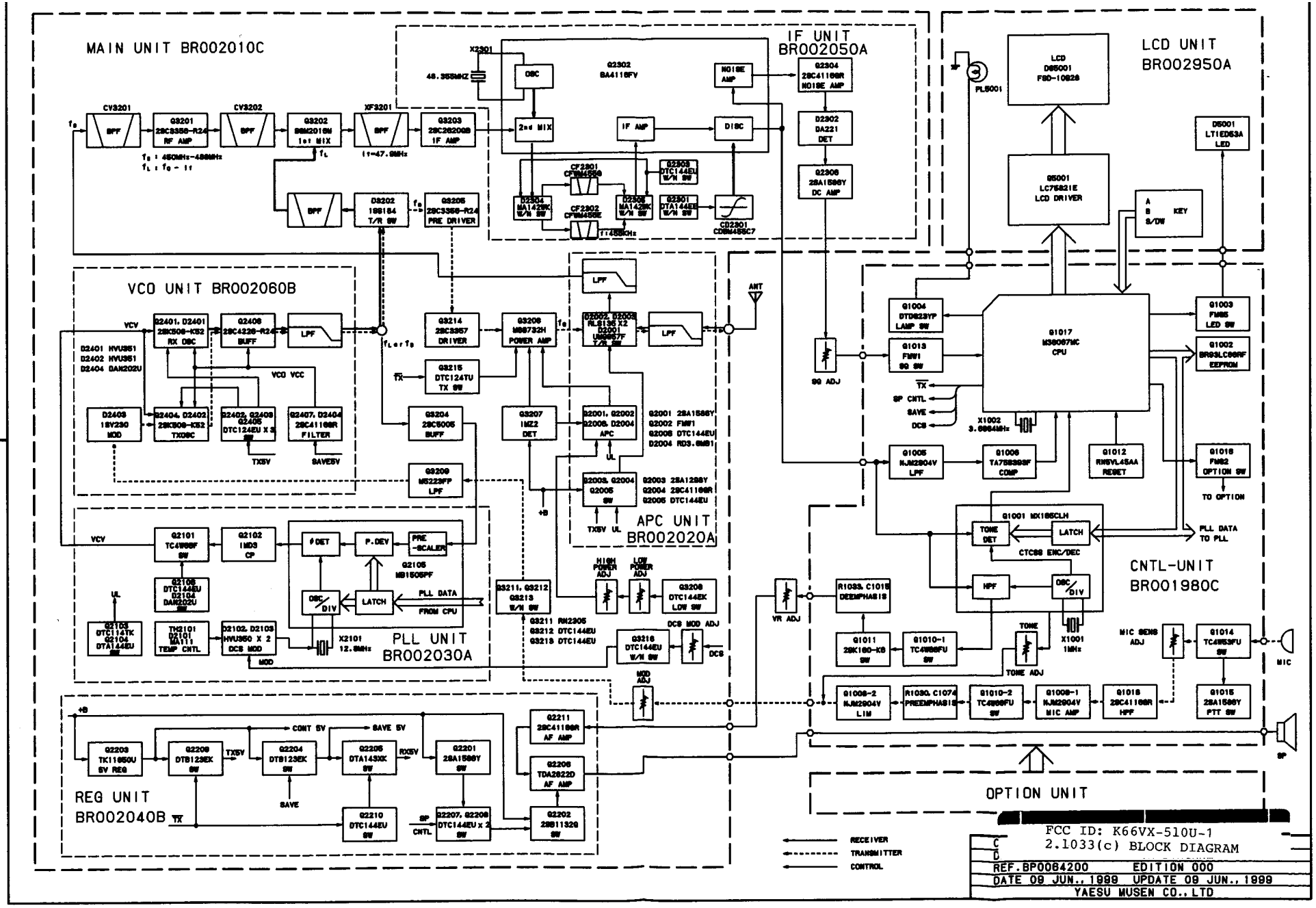
MAIN UNIT BR002010C
IF UNIT BR002050A
LCD UNIT BR002950A
VCO UNIT BR002060B
APC UNIT BR002020A
PLL UNIT BR002030A
CNTL-UNIT BR001980C
REG UNIT BR002040B
OPTION UNIT
RECEIVER
TRANSMITTER
CONTROL
FCC ID: K66VX-510U-1
2.1033(c) BLOCK DIAGRAM
REF.BP0084200 EDITION 000
DATE 09 JUN., 1999 UPDATE 09 JUN., 1999
YAESU MUSEN CO., LTD