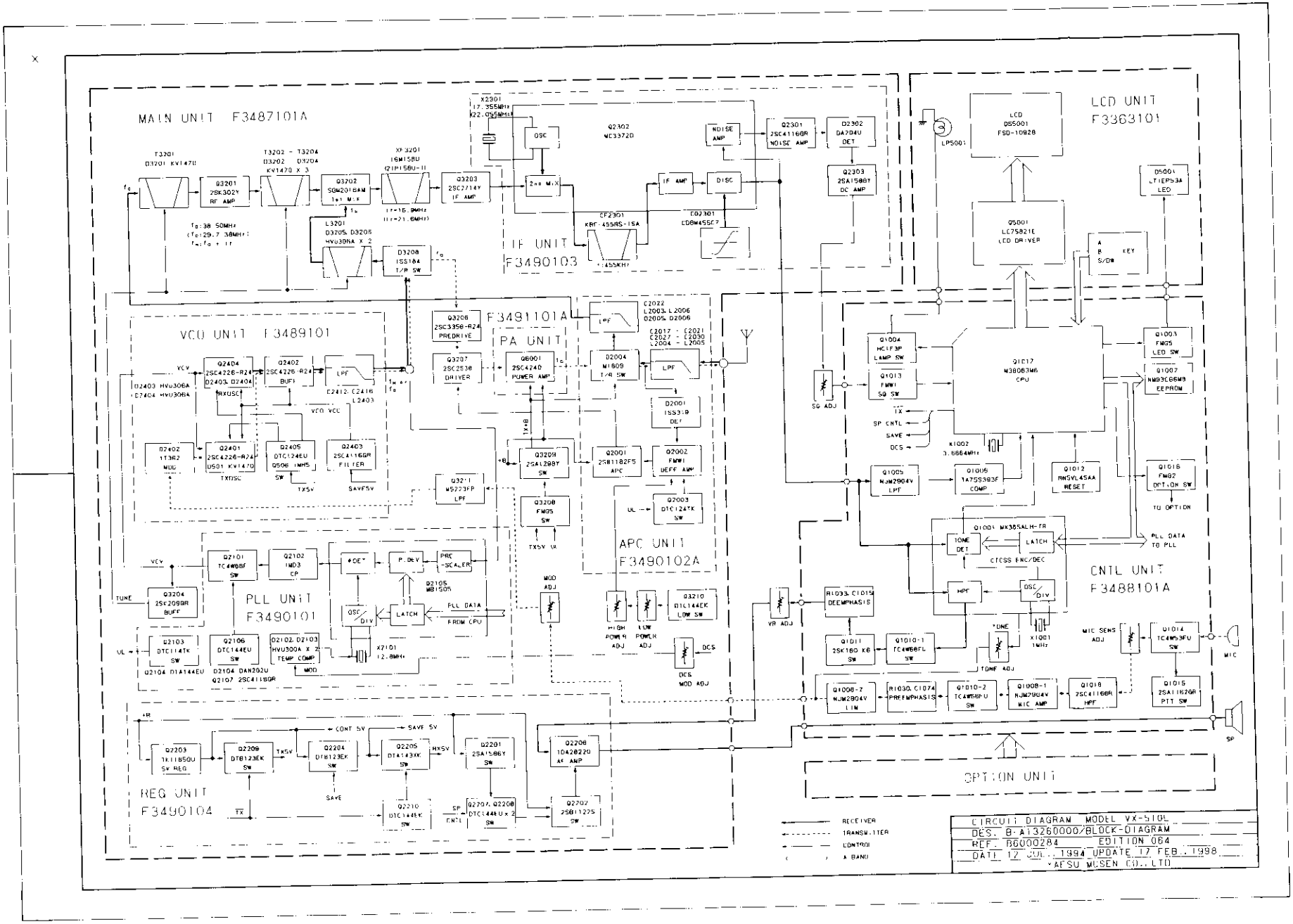
MAIN UNIT F3487101A
VCO UNIT F3489101
PLL UNIT F3490101
REG UNIT F3490104
IF UNIT F3490103
PA UNIT F3491101A
APC UNIT F3490102A
LCD UNIT F3363101
CNTL UNIT F3488101A
OPTION UNIT
RECEIVER
TRANSMITTER
CONTROL
A BAND
CIRCUIT DIAGRAM MODEL VX-510L
DES. B-A13260000/BLOCK-DIAGRAM
REF. B6000284 EDITION 064
DATE 17 JUL. 1994 UPDATE 17 FEB. 1998
YAESU MUSEN CO., LTD.