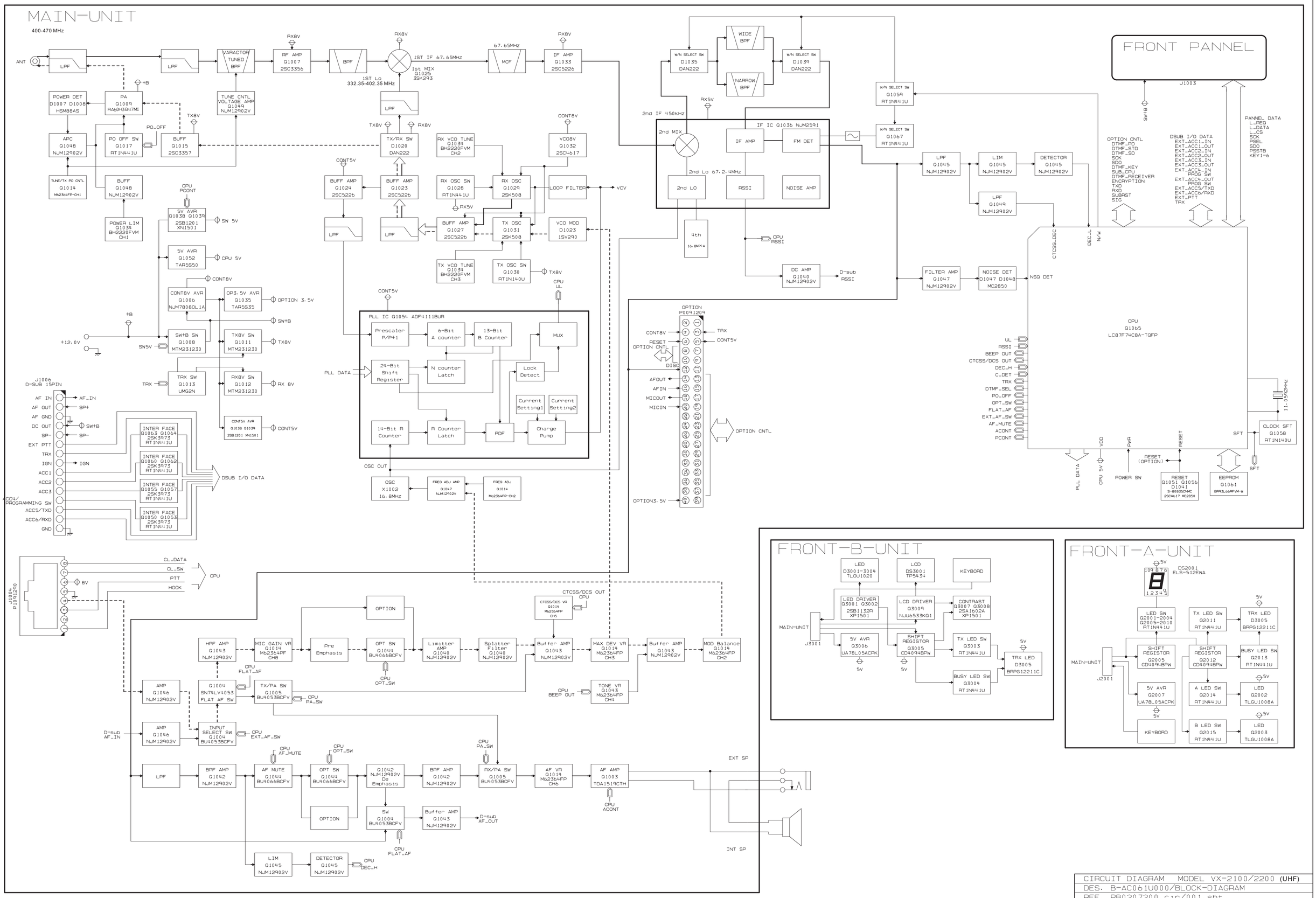

CIRCUIT DIAGRAM MODEL VX-2100/2200 **(UHF)**	
DES. B-AC061U000/BLOCK-DIAGRAM	
REF. PB0207200.cir/001.sht	
DATE	UPDATE
VERTEX STANDARD CO.,LTD.	