TÜV America Inc., TCB
10040 Mesa Rim Road
San Diego, CA 92121
www.TUVamerica.com/tcb

Phone: (858) 678 1400
Fax: (858) 546-0364
E-mail: tcb@tuvam.com
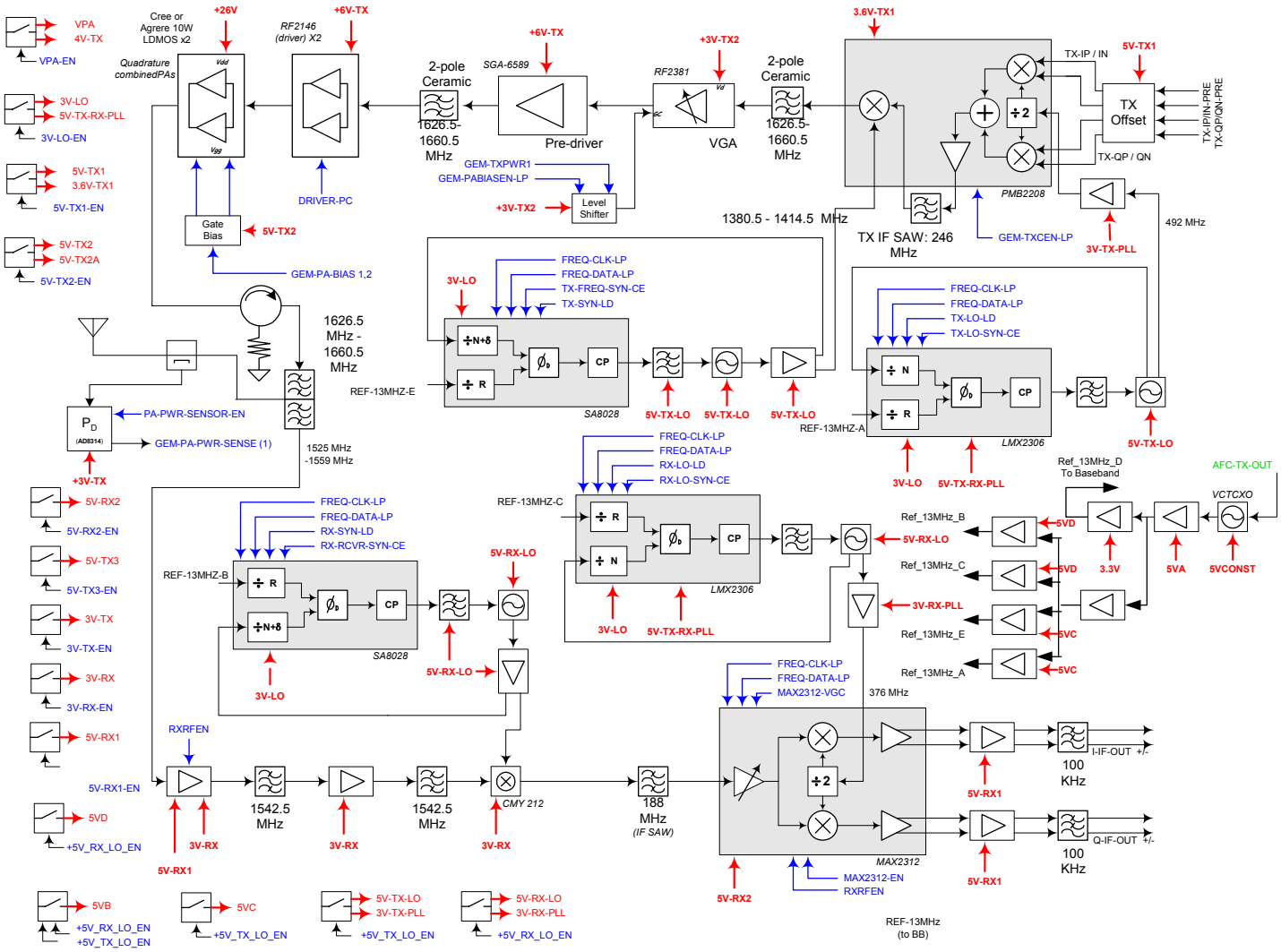
16. *Block Diagram* with oscillator frequencies.