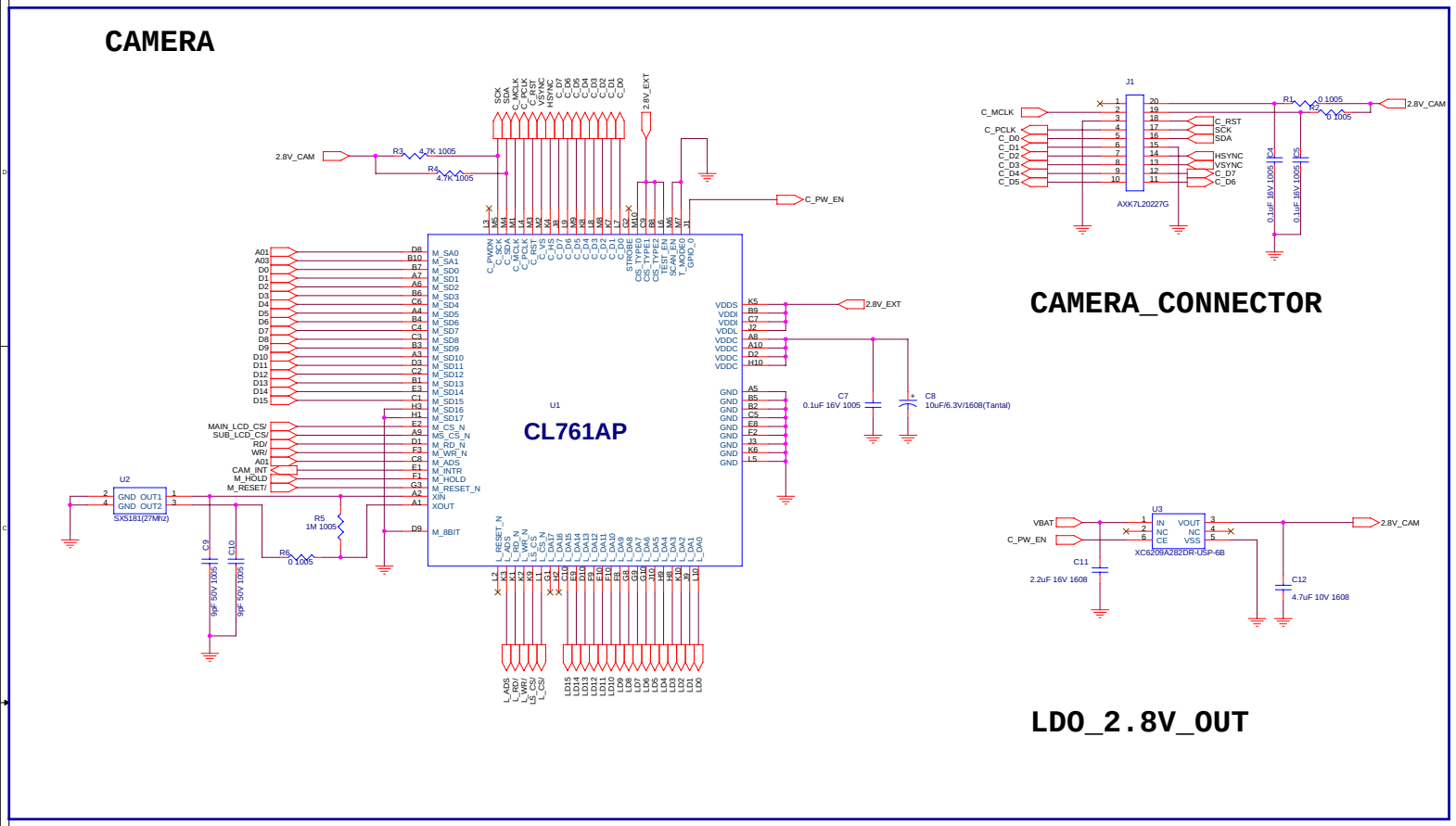

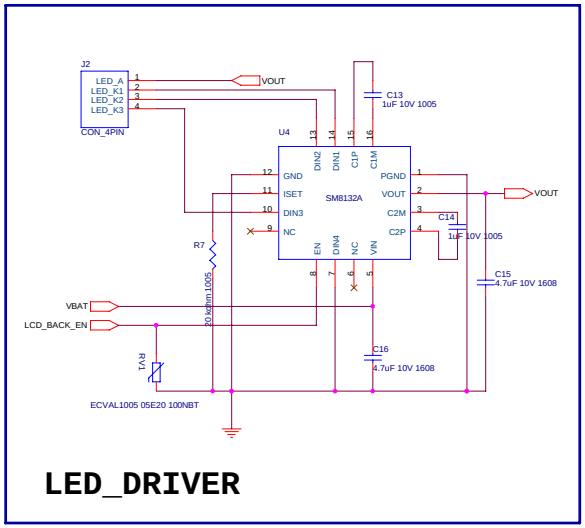

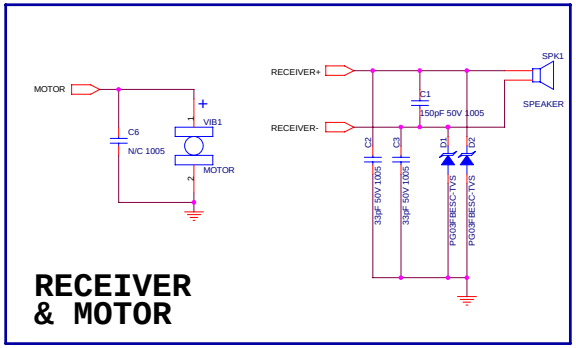

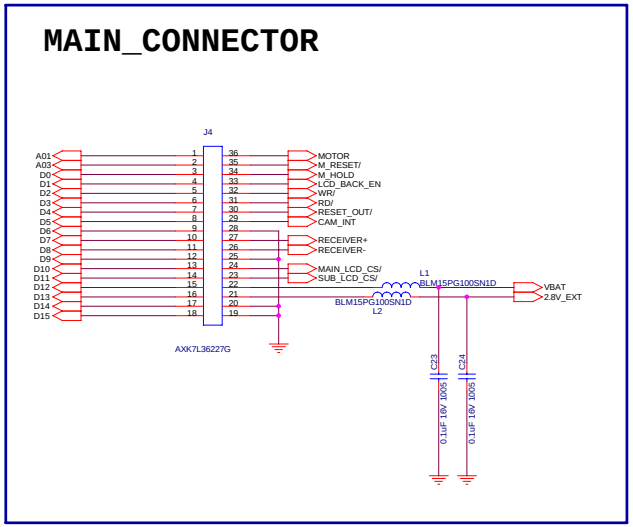

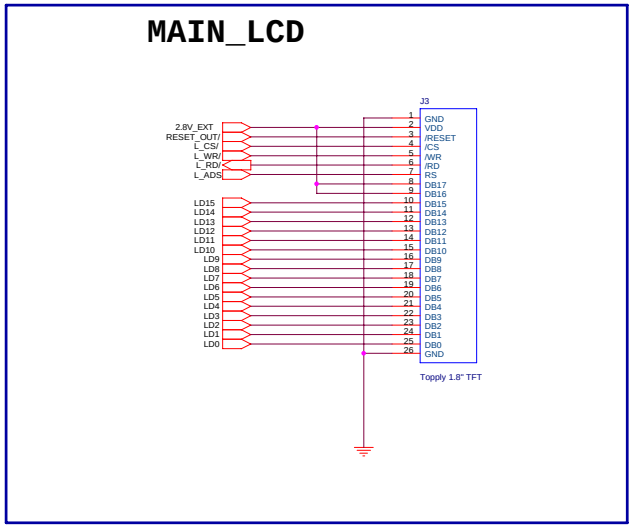

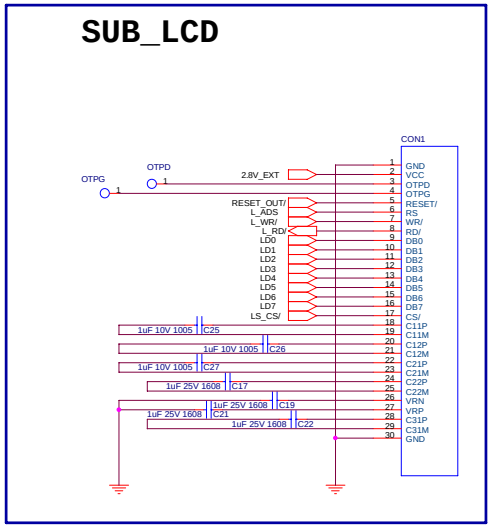

Title	PG1810-MMI-PCB_G	
Size A2	Document Number Drawing by kwon soon young	Rev 0.2
Date: Friday, January 06, 2006	Sheet 1 of 1	