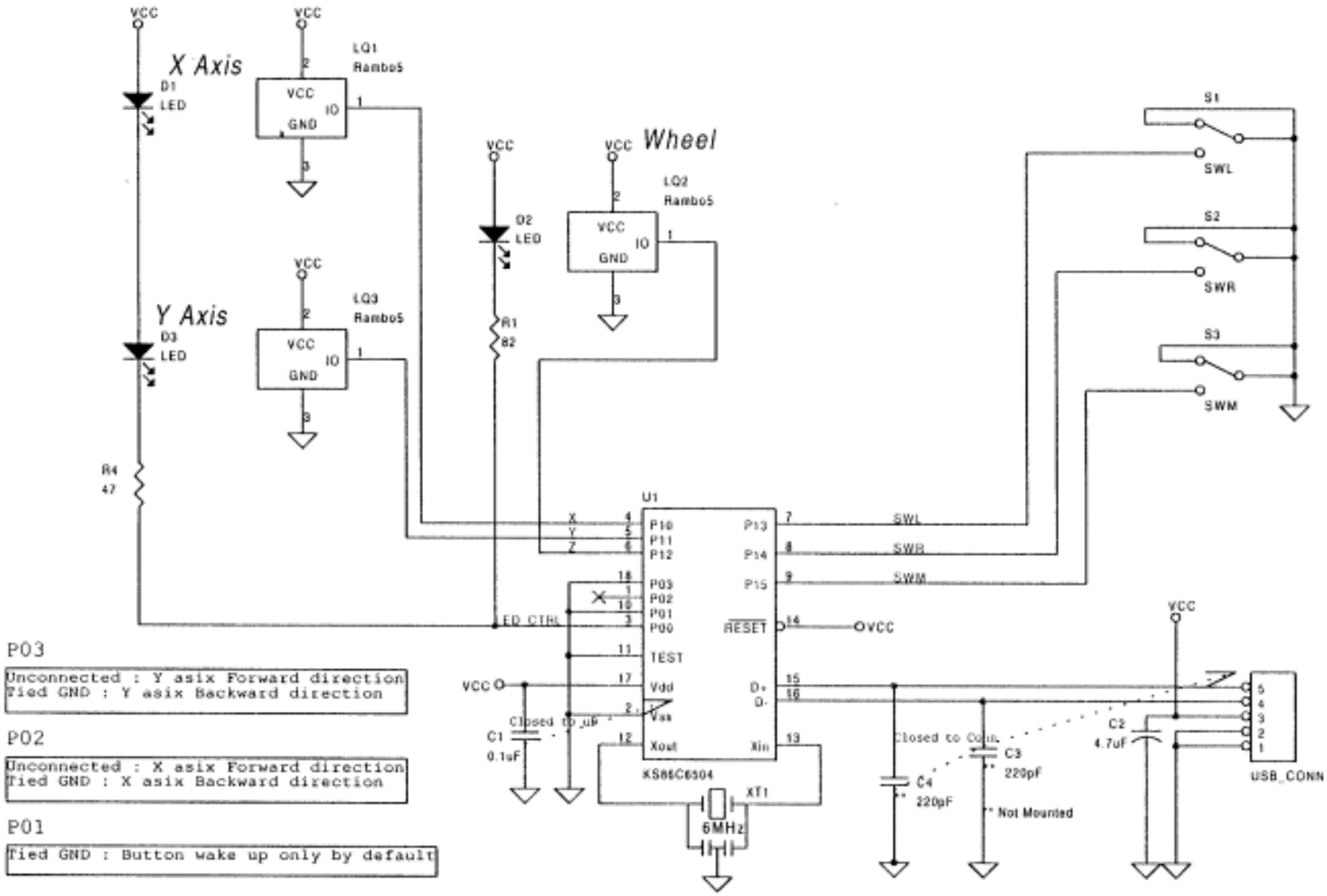
X Axis
Y Axis
Wheel
VCC
D1 LED
D2 LED
D3 LED
LQ1 Rambo5
LQ2 Rambo5
LQ3 Rambo5
R1 82
R4 47
U1
KS86C6504
P10
P11
P12
P03
P02
P01
P00
TEST
Vdd
Vss
Xout
Xin
P13
P14
P15
RESET
D+
D-
LED CTRL
SWL
SWR
SWM
S1
S2
S3
C1 0.1uF
C2 4.7uF
C3 220pF
C4 220pF
XT1
6MHz
USB_CONN
Not Mounted
P03
Unconnected : Y asix Forward direction
Tied GND : Y asix Backward direction
P02
Unconnected : X asix Forward direction
Tied GND : X asix Backward direction
P01
Tied GND : Button wake up only by default