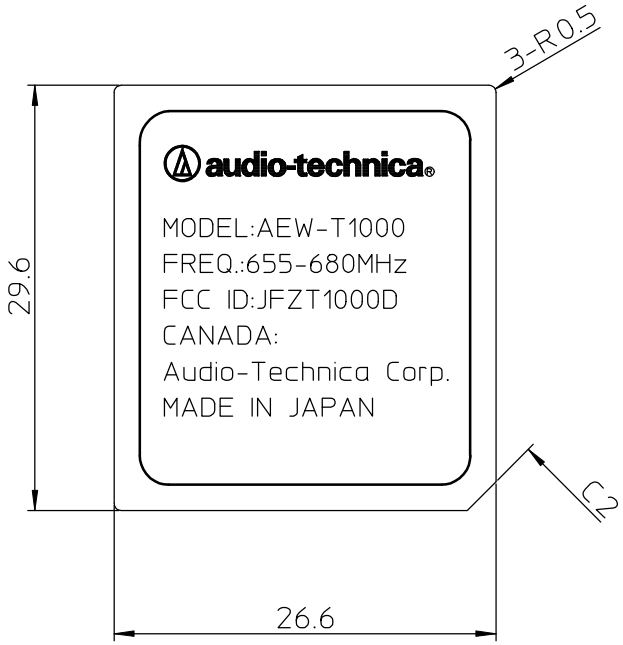
3-R0.5
audio-technica
MODEL:AEW-T1000
FREQ.:655-680MHz
FCC ID:JFZT1000D
CANADA:
Audio-Technica Corp.
MADE IN JAPAN
29.6
C2
26.6