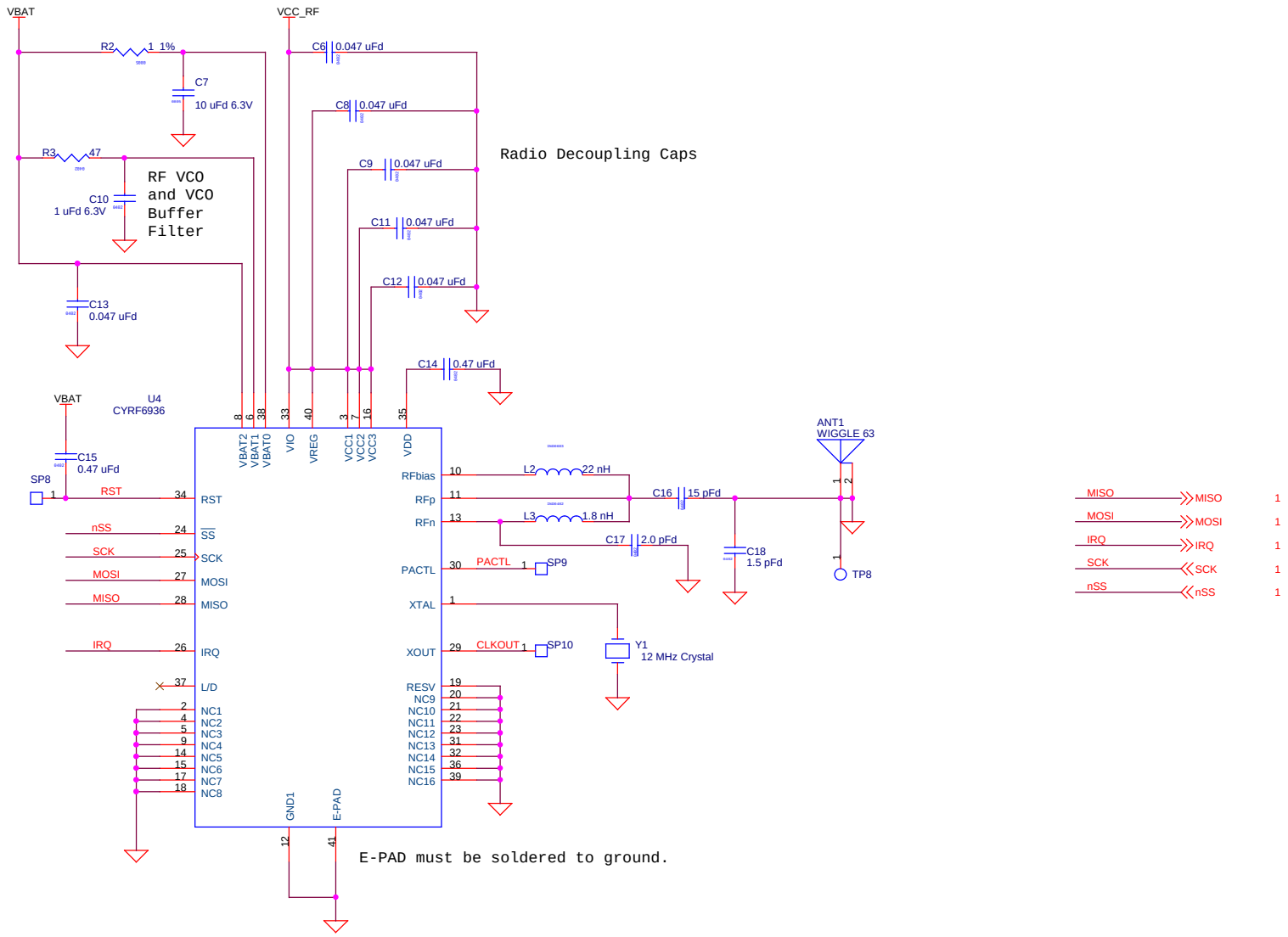

DRAW	
CHK	
APP.	

Sunrex Technology Corp.

Title: **KM713A-MOUSE RF**

Size: B | Document Number: <Doc> | Rev: <RevCode>

Date: Thursday, March 27, 2008 | Sheet 2 of 2

PDF created with FinePrint pdfFactory Pro trial version http://www.pdffactory.com