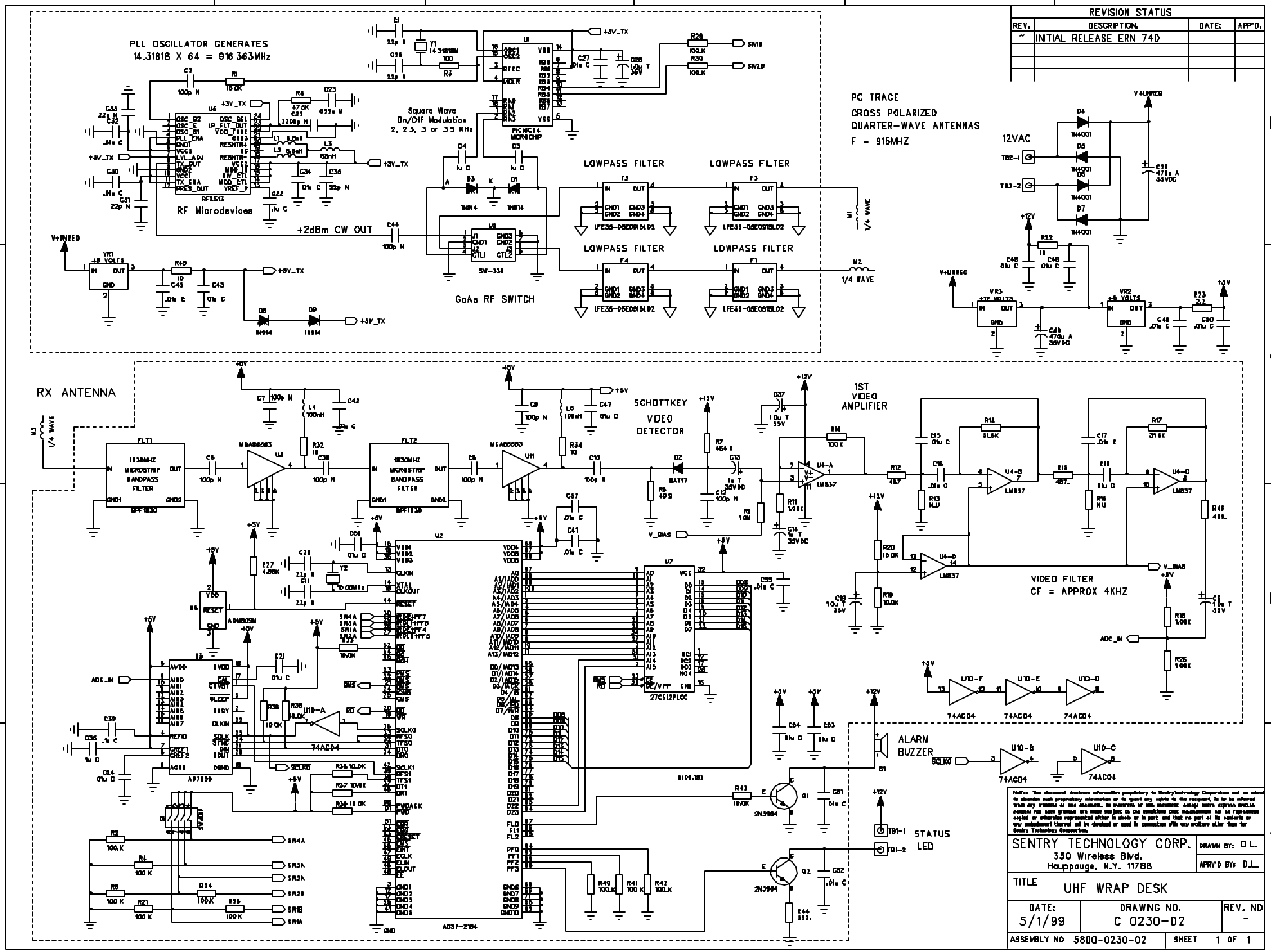
REVISION STATUS
REV. | DESCRIPTION | DATE | APP'D.
~ | INITIAL RELEASE ERN 74D
PLL OSCILLATOR GENERATES
14.31818 X 64 = 916.363MHz
RF Microdevices
Square Wave
On/Off Modulation
2, 2.5, 3 or 3.5 KHz
+2dBm CW OUT
GaAs RF SWITCH
LOWPASS FILTER
LOWPASS FILTER
LOWPASS FILTER
LOWPASS FILTER
PC TRACE
CROSS POLARIZED
QUARTER-WAVE ANTENNAS
F = 916MHZ
1/4 WAVE
1/4 WAVE
12VAC
RX ANTENNA
1/4 WAVE
SCHOTTKEY
VIDEO
DETECTOR
1ST
VIDEO
AMPLIFIER
VIDEO FILTER
CF = APPROX 4KHZ
ALARM
BUZZER
STATUS
LED
SENTRY TECHNOLOGY CORP.
350 Wireless Blvd.
Hauppauge, N.Y. 11788
DRAWN BY: D.L.
APRV'D BY: D.L.
TITLE
UHF WRAP DESK
DATE: 5/1/99
DRAWING NO. C 0230-D2
REV. NO -
ASSEMBLY NO 5800-0230-02
SHEET 1 OF 1