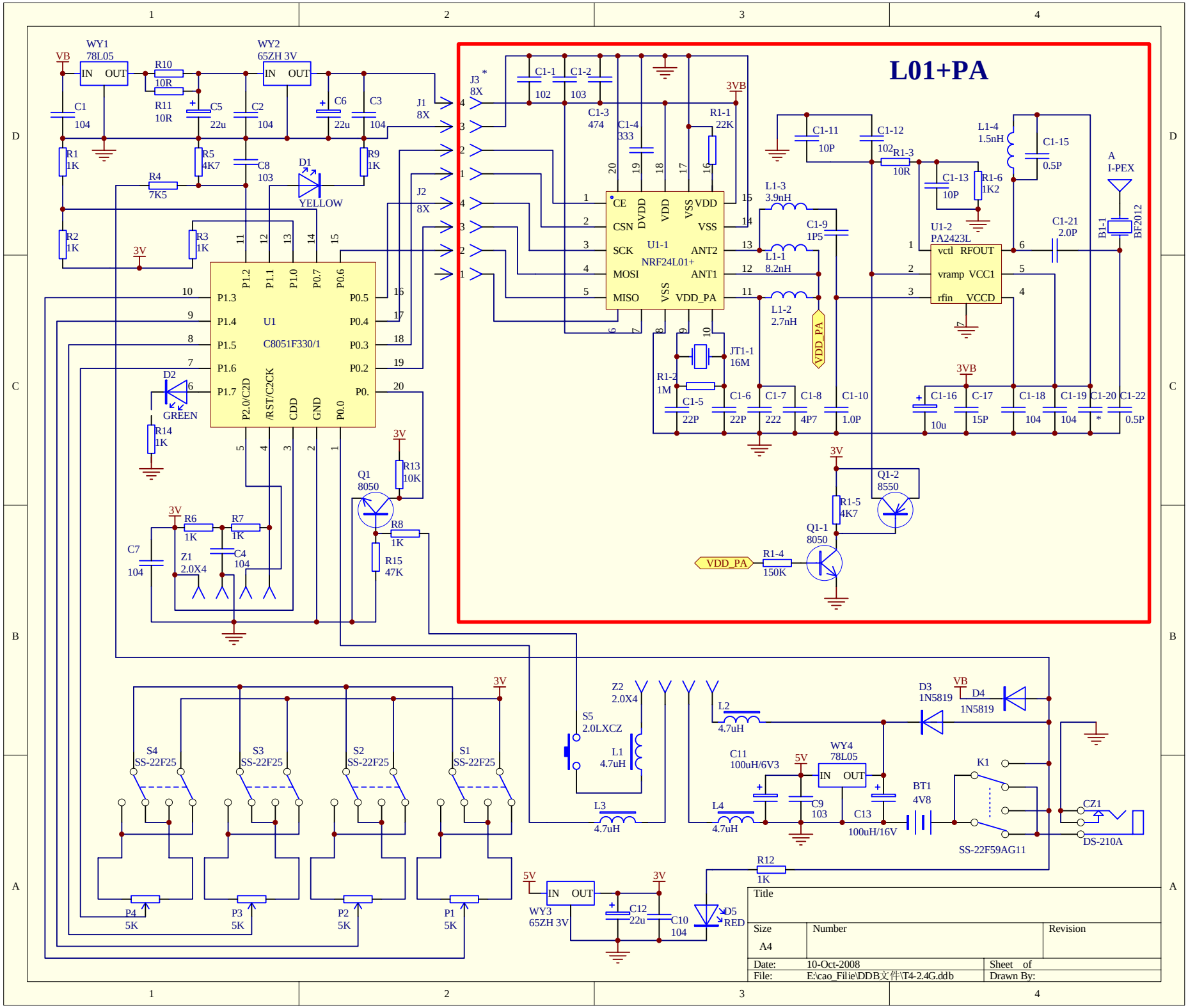
L01+PA
WY1
78L05
IN OUT
WY2
65ZH 3V
VB
R10
10R
R11
10R
C1
104
C5
22u
C2
104
C6
22u
C3
104
R1
1K
R5
4K7
C8
103
D1
YELLOW
R9
1K
R4
7K5
R2
1K
R3
1K
3V
J1
8X
J2
8X
J3
8X
U1
C8051F330/1
P1.2
P1.1
P1.0
P0.7
P0.6
P1.3
P1.4
P1.5
P1.6
P1.7
P0.5
P0.4
P0.3
P0.2
P0.
P2.0/C2D
/RST/C2CK
CDD
GND
P0.0
D2
GREEN
R14
1K
R13
10K
Q1
8050
R6
1K
R7
1K
C7
104
Z1
2.0X4
C4
104
R8
1K
R15
47K
C1-1
102
C1-2
103
C1-3
474
C1-4
333
R1-1
22K
3VB
CE
CSN
SCK
MOSI
MISO
DVDD
VDD
VSS
VDD
VSS
ANT2
ANT1
VDD_PA
U1-1
NRF24L01+
JT1-1
16M
R1-2
1M
C1-5
22P
C1-6
22P
C1-7
222
C1-8
4P7
C1-10
1.0P
L1-3
3.9nH
C1-9
1P5
L1-1
8.2nH
L1-2
2.7nH
VDD_PA
C1-11
10P
C1-12
102
R1-3
10R
C1-13
10P
R1-6
1K2
L1-4
1.5nH
C1-15
0.5P
U1-2
PA2423L
vctl RFOUT
vramp VCC1
rfin VCCD
C1-21
2.0P
A
I-PEX
B1-1
BF2012
C1-16
10u
C-17
15P
C1-18
104
C1-19
104
C1-20
*
C1-22
0.5P
R1-5
4K7
Q1-2
8550
Q1-1
8050
R1-4
150K
S4
SS-22F25
S3
SS-22F25
S2
SS-22F25
S1
SS-22F25
P4
5K
P3
5K
P2
5K
P1
5K
Z2
2.0X4
S5
2.0LXCZ
L1
4.7uH
L3
4.7uH
L2
4.7uH
L4
4.7uH
C11
100uH/6V3
WY4
78L05
C9
103
C13
100uH/16V
BT1
4V8
D3
1N5819
D4
1N5819
K1
SS-22F59AG11
CZ1
DS-210A
5V
WY3
65ZH 3V
C12
22u
C10
104
D5
RED
R12
1K
Title
Size
A4
Number
Revision
Date: 10-Oct-2008
Sheet of
File: E:\cao_Filie\DDB文件\T4-2.4G.ddb
Drawn By: