TRANSMITTER SCHERMAIC

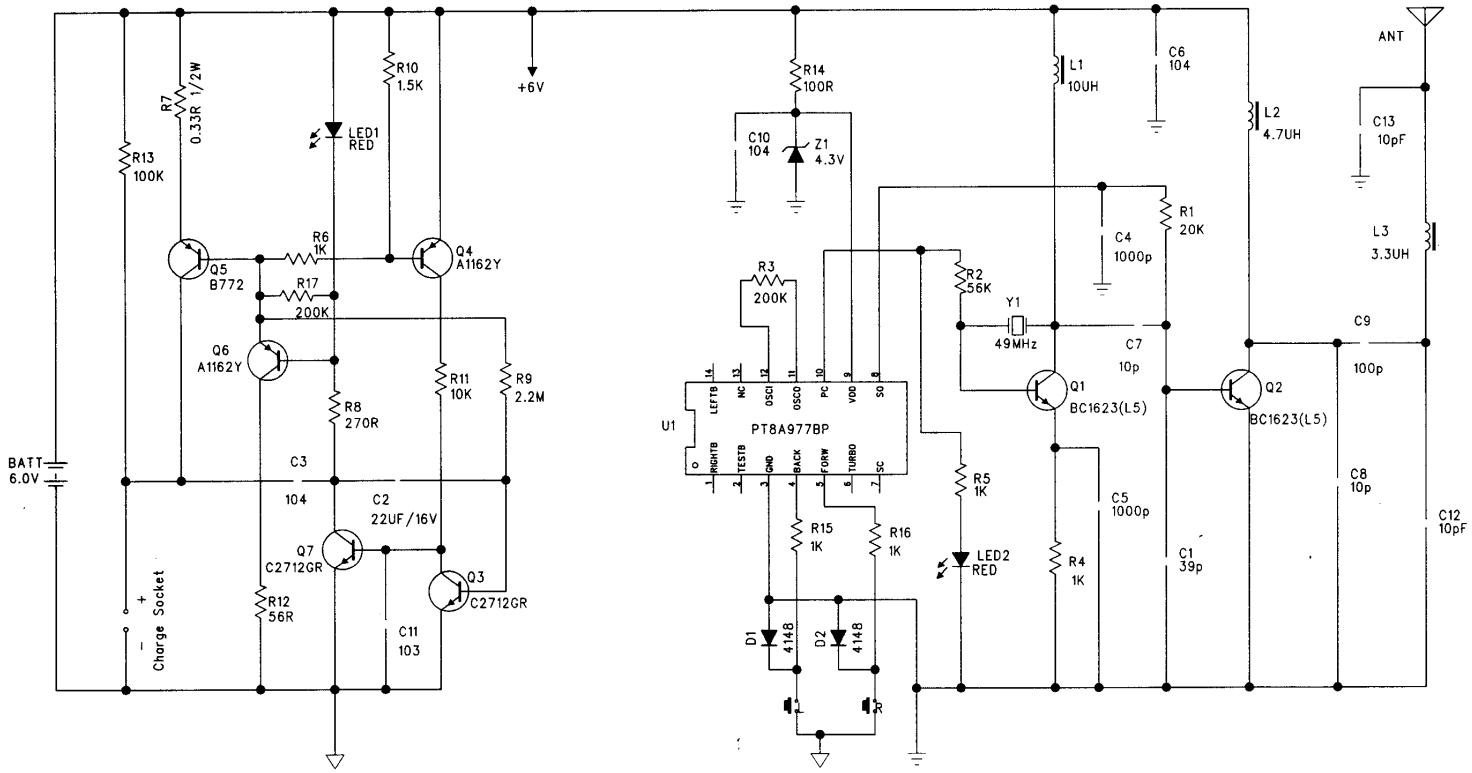

company : **EPI**

MODEL:MOTOR CYCLE TRANSMITTER SCHERMAIC

DRAW BY: X.Y.Wen / 20-May-04