Flatbed Scanner AM12S CIRCUIT BLOCK DIAGRAM

FCC ID:ITEUECVSAM12S

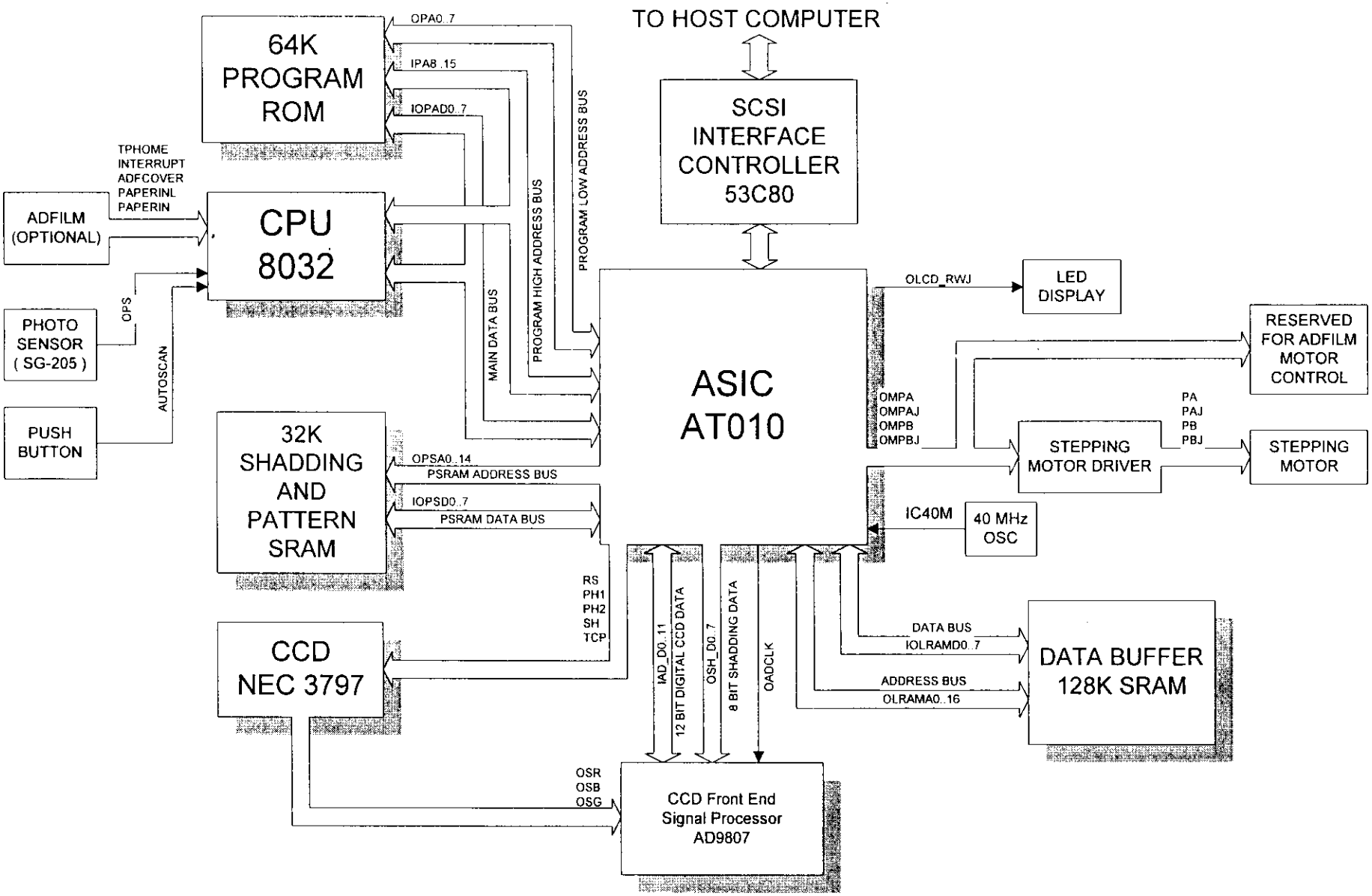

EXHIBIT G