4.1 BLOCK DIAGRAM

FCC ID: IQX98C1770

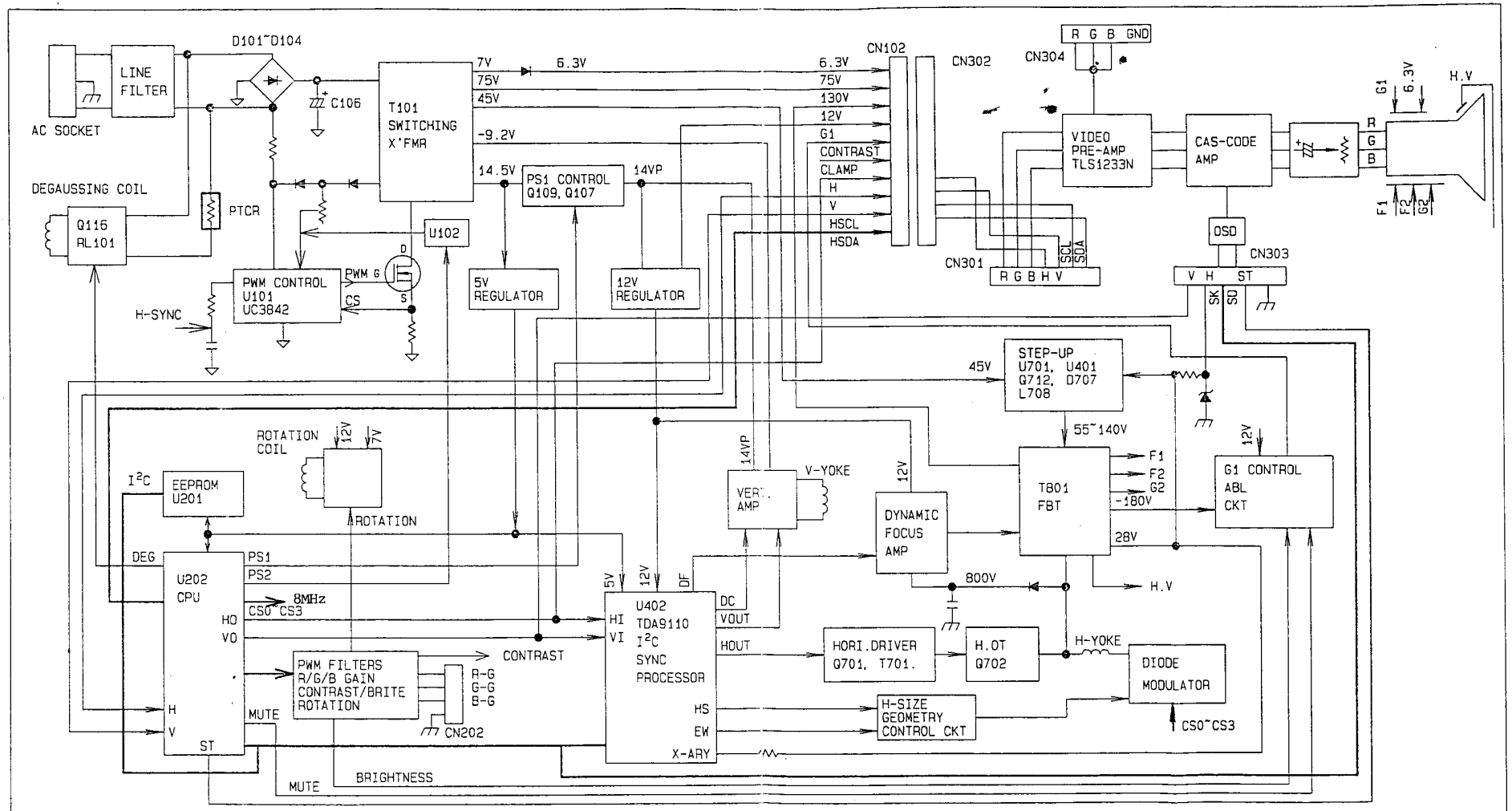

NO					REV: A
	NAME: C706-D BLOCK CKT		Q'TY	MATERIAL	
DATE		TOLERANCE		SCALE	
06/18/'98		DIM	ANGLE		: mm
DRAWN	DESIGNED	CHECKED	APPROVED	MODEL	C706-D
S.Y.SU				DRAWING NO	706DBK.SCH
				SHAMROCK CORP.	