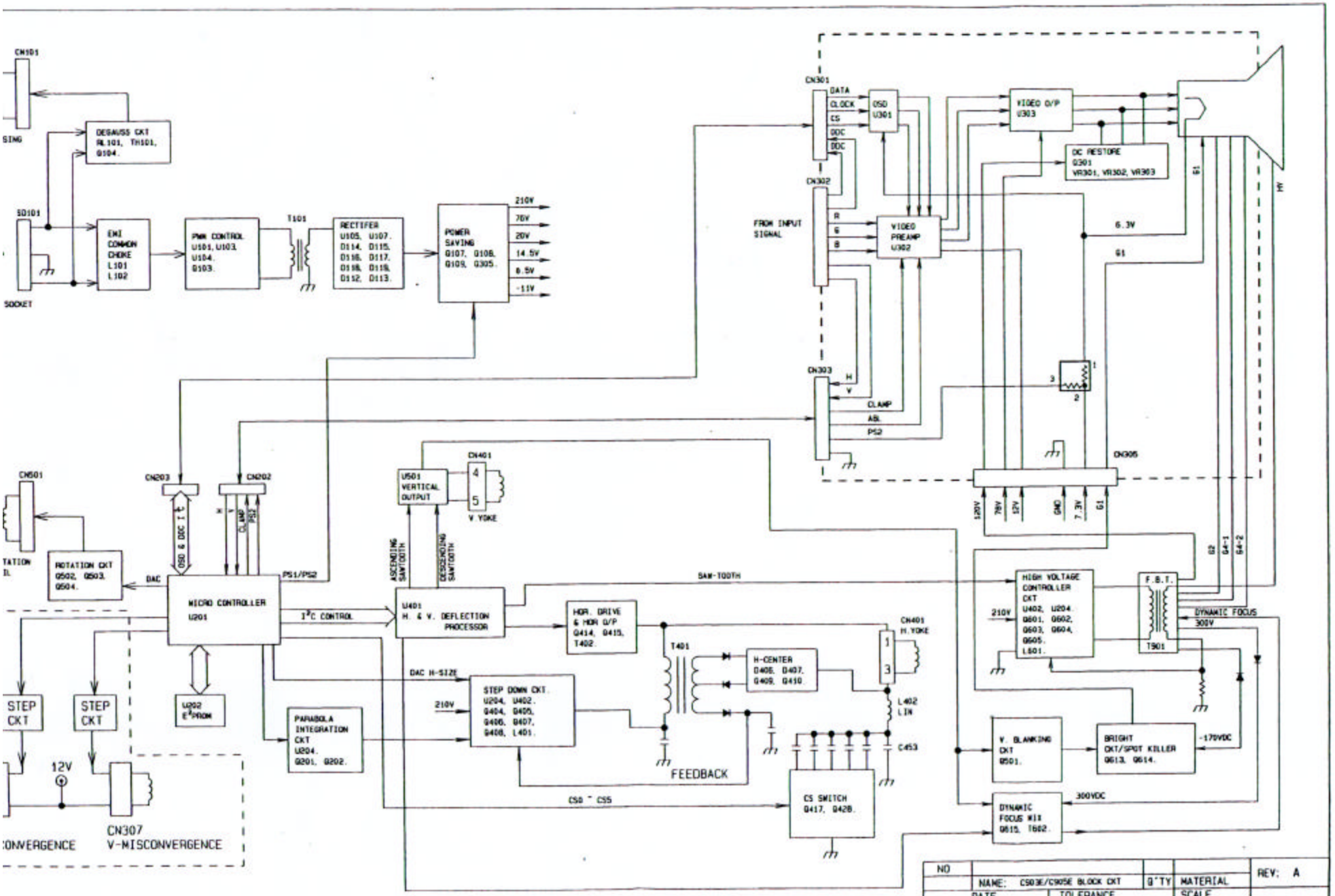
CN101
SING
DEGAUSS CKT
RL101, TH101,
Q104.
SO101
SOCKET
EMI
COMMON
CHOKE
L101
L102
PWR CONTROL
U101, U103,
U104,
Q103.
T101
RECTIFER
U105, U107,
D114, D115,
D116, D117,
D118, D119,
D112, D113.
POWER
SAVING
Q107, Q108,
Q109, Q305.
210V
70V
20V
14.5V
8.5V
-11V
CN301
DATA
CLOCK
CS
DDC
DDC
OSD
U301
VIDEO O/P
U303
DC RESTORE
Q301
VR301, VR302, VR303
CN302
FROM INPUT
SIGNAL
R
G
B
VIDEO
PREAMP
U302
6.3V
G1
CN303
H
V
CLAMP
ABL
PS2
CN305
120V
70V
12V
GND
7.3V
G1
G2
G4-1
G4-2
HV
CN601
TATION
IL
ROTATION CKT
Q502, Q503,
Q504.
CN203
CN202
OSD & DDC I²C
CLAMP
PS2
DAC
MICRO CONTROLLER
U201
PS1/PS2
I²C CONTROL
U501
VERTICAL
OUTPUT
CN401
V YOKE
ASCENDING
SAWTOOTH
DESCENDING
SAWTOOTH
U401
H. & V. DEFLECTION
PROCESSOR
SAW-TOOTH
HOR. DRIVE
& HOR O/P
Q414, Q415,
T402.
T401
H-CENTER
Q406, Q407,
Q409, Q410
CN401
H.YOKE
L402
LIN
C453
FEEDBACK
DAC H-SIZE
STEP DOWN CKT.
U204, U402,
Q404, Q405,
Q406, Q407,
Q408, L401.
210V
PARABOLA
INTEGRATION
CKT
U204,
Q201, Q202.
U202
E²PROM
STEP
CKT
STEP
CKT
12V
CN307
V-MISCONVERGENCE
CONVERGENCE
CS0 ~ CS5
CS SWITCH
Q417, Q428.
HIGH VOLTAGE
CONTROLLER
CKT
U402, U204,
Q601, Q602,
Q603, Q604,
Q605,
L601.
210V
F.B.T.
T501
DYNAMIC FOCUS
300V
V. BLANKING
CKT
Q501.
BRIGHT
CKT/SPOT KILLER
Q613, Q614.
-170VDC
DYNAMIC
FOCUS KIT
Q615, T602.
300VDC
NO
NAME: C503E/C905E BLOCK CKT
Q'TY
MATERIAL
REV: A
DATE
02/26'99
TOLERANCE
DIM
ANGLE
SCALE
DRAWN
DESIGNED
CHECKED
APPROVED
S.Y.SU
MODEL
C709/C903/5
DRAWING NO
903EBK.SCH
SHAMROCK CORP.