APPENDIX D – DUT AND ACCESSORY PHOTOS

Figure 4	A03321
Top Side	Left Side
Bottom Side	Right Side
Front Side	Back Side

Figure 5	A03321

Top Front View with Ruler

Figure 6	A03321

Top Side View with Ruler

©2017 Celltech Labs Inc. This document is not to be reproduced in whole or in part without the expressed written permission of Celltech Labs Inc.

Figure 7	Accessory Photos

Figure	A03321
8	

Antenna Location

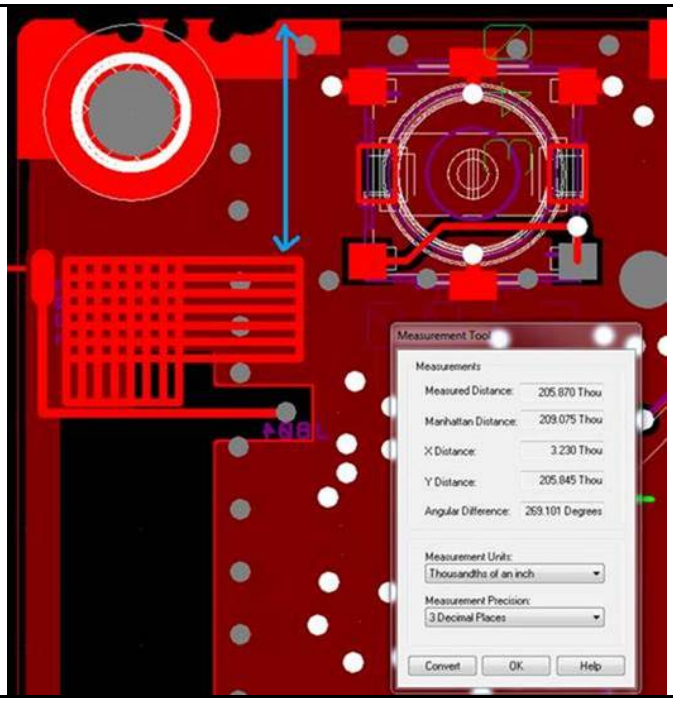

©2017 Celltech Labs Inc. This document is not to be reproduced in whole or in part without the expressed written permission of Celltech Labs Inc.

Figure	A03321
9	

Antenna Location

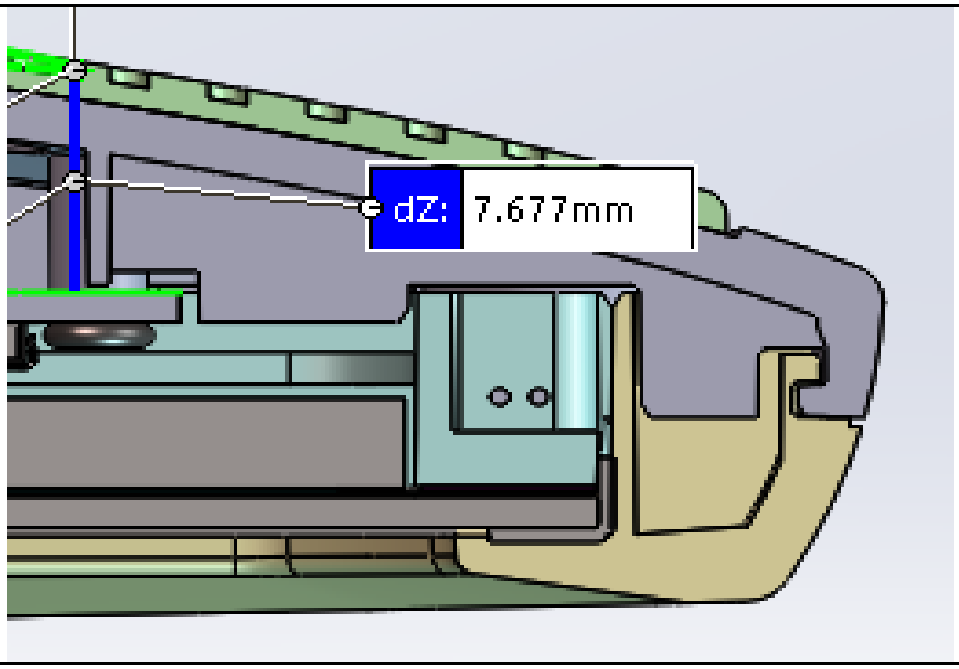

©2017 Celltech Labs Inc. This document is not to be reproduced in whole or in part without the expressed written permission of Celltech Labs Inc.