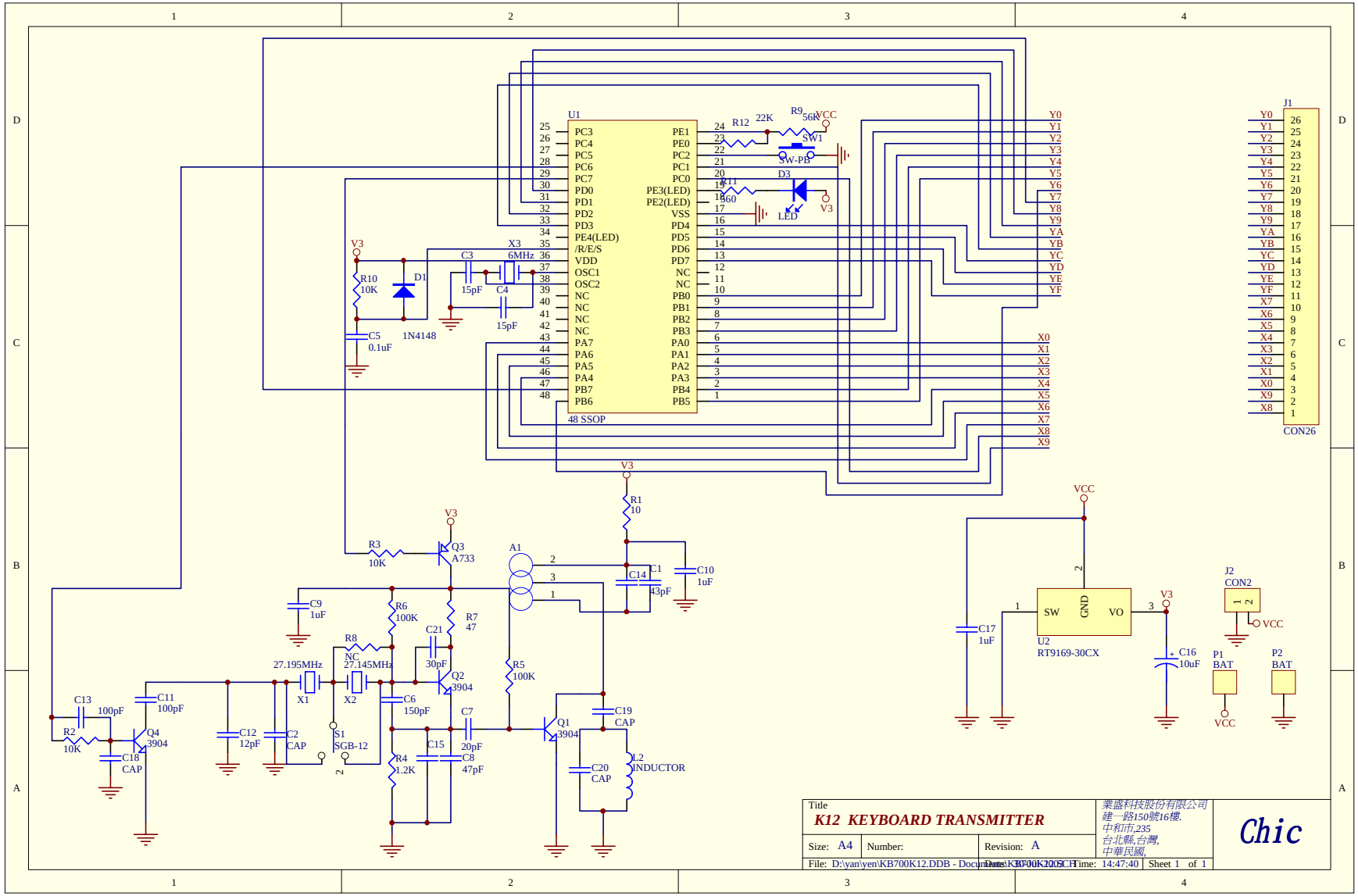
U1
48 SSOP
PC3 PC4 PC5 PC6 PC7 PD0 PD1 PD2 PD3 PE4(LED) /R/E/S VDD OSC1 OSC2 NC NC NC NC PA7 PA6 PA5 PA4 PB7 PB6
PE1 PE0 PC2 PC1 PC0 PE3(LED) PE2(LED) VSS PD4 PD5 PD6 PD7 NC NC PB0 PB1 PB2 PB3 PA0 PA1 PA2 PA3 PB4 PB5
R12 22K
R9 56K
VCC
SW1
SW-PB
D3
R11 560
LED
V3
Y0 Y1 Y2 Y3 Y4 Y5 Y6 Y7 Y8 Y9 YA YB YC YD YE YF
X0 X1 X2 X3 X4 X5 X6 X7 X8 X9
J1
CON26
V3
R10 10K
D1
1N4148
C5 0.1uF
C3 15pF
X3 6MHz
C4 15pF
R1 10
C1 43pF
C14
C10 1uF
R3 10K
Q3 A733
A1
C9 1uF
R6 100K
R7 47
R8 NC
C21 30pF
Q2 3904
27.195MHz
X1
27.145MHz
X2
C6 150pF
R5 100K
C13 100pF
C11 100pF
R2 10K
Q4 3904
C18 CAP
C12 12pF
C2 CAP
S1 SGB-12
R4 1.2K
C15 20pF
C7
C8 47pF
Q1 3904
C19 CAP
C20 CAP
L2 INDUCTOR
VCC
C17 1uF
SW
GND
VO
U2
RT9169-30CX
V3
C16 10uF
J2
CON2
VCC
P1 BAT
P2 BAT
VCC
Title
K12 KEYBOARD TRANSMITTER
Size: A4
Number:
Revision: A
Date: 2005
Time: 14:47:40
Sheet 1 of 1
業盛科技股份有限公司
建一路150號16樓.
中和市,235
台北縣,台灣,
中華民國,
Chic