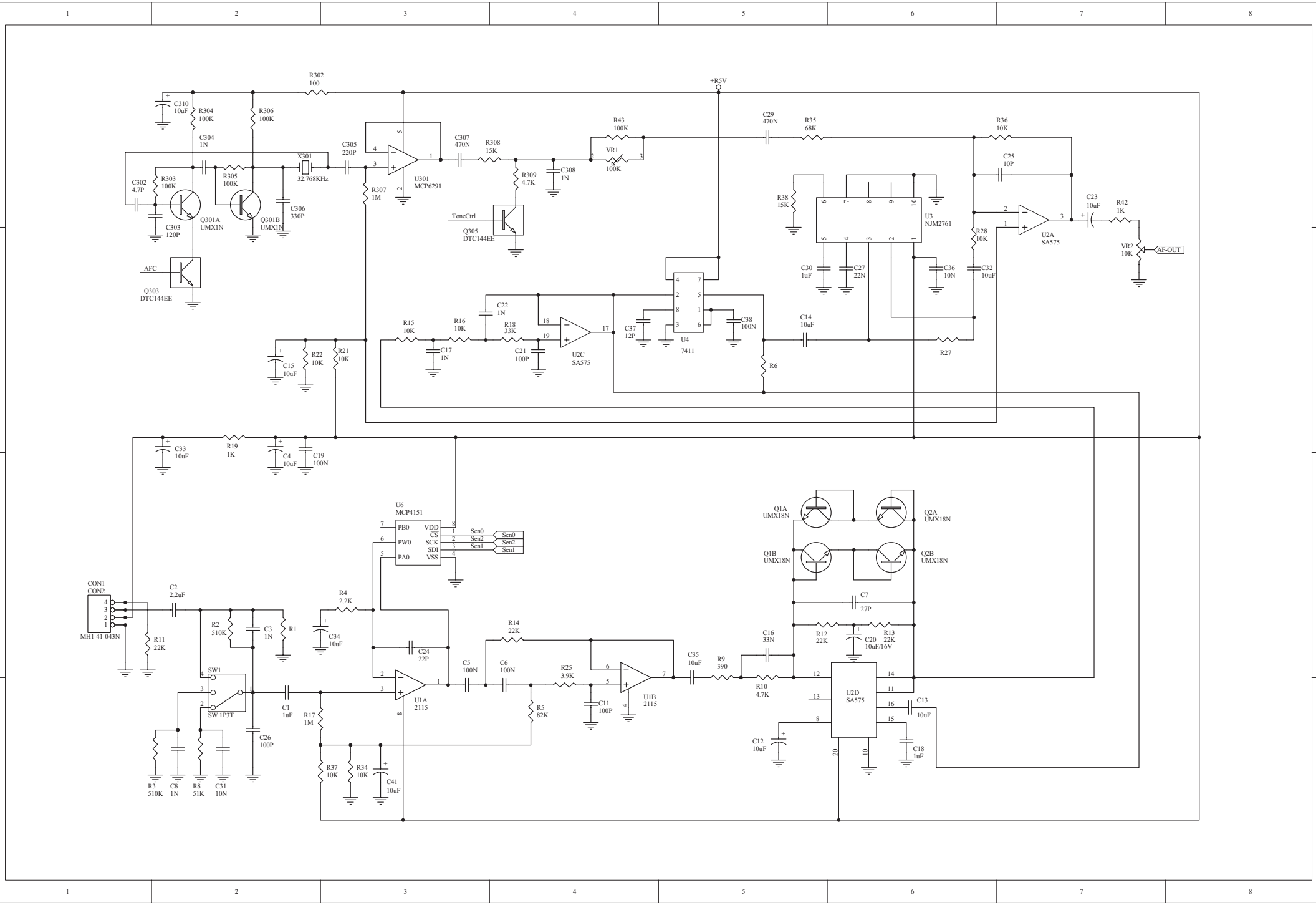
R302
100
+R5V
C310
10uF
R304
100K
R306
100K
C304
1N
X301
32.768KHz
C305
220P
C307
470N
R308
15K
R43
100K
VR1
100K
C29
470N
R35
68K
R36
10K
C25
10P
C302
4.7P
R303
100K
R305
100K
C306
330P
C303
120P
Q301A
UMX1N
Q301B
UMX1N
U301
MCP6291
R307
1M
R309
4.7K
C308
1N
ToneCtrl
Q305
DTC144EE
R38
15K
U3
NJM2761
C30
1uF
C27
22N
C36
10N
R28
10K
C32
10uF
U2A
SA575
C23
10uF
R42
1K
VR2
10K
AF-OUT
AFC
Q303
DTC144EE
C22
1N
R15
10K
R16
10K
R18
33K
C17
1N
C21
100P
U2C
SA575
C37
12P
U4
7411
C38
100N
C14
10uF
R27
R6
C15
10uF
R22
10K
R21
10K
C33
10uF
R19
1K
C4
10uF
C19
100N
U6
MCP4151
PB0
PW0
PA0
VDD
CS
SCK
SDI
VSS
Sen0
Sen2
Sen1
Q1A
UMX18N
Q2A
UMX18N
Q1B
UMX18N
Q2B
UMX18N
CON1
CON2
MH1-41-043N
C2
2.2uF
R11
22K
R2
510K
C3
1N
R1
R4
2.2K
C34
10uF
C24
22P
R14
22K
C7
27P
C16
33N
R12
22K
C20
10uF/16V
R13
22K
SW1
SW 1P3T
C1
1uF
C26
100P
R17
1M
U1A
2115
C5
100N
C6
100N
R25
3.9K
R5
82K
C11
100P
U1B
2115
C35
10uF
R9
390
R10
4.7K
U2D
SA575
C13
10uF
C12
10uF
C18
1uF
R3
510K
C8
1N
R8
51K
C31
10N
R37
10K
R34
10K
C41
10uF

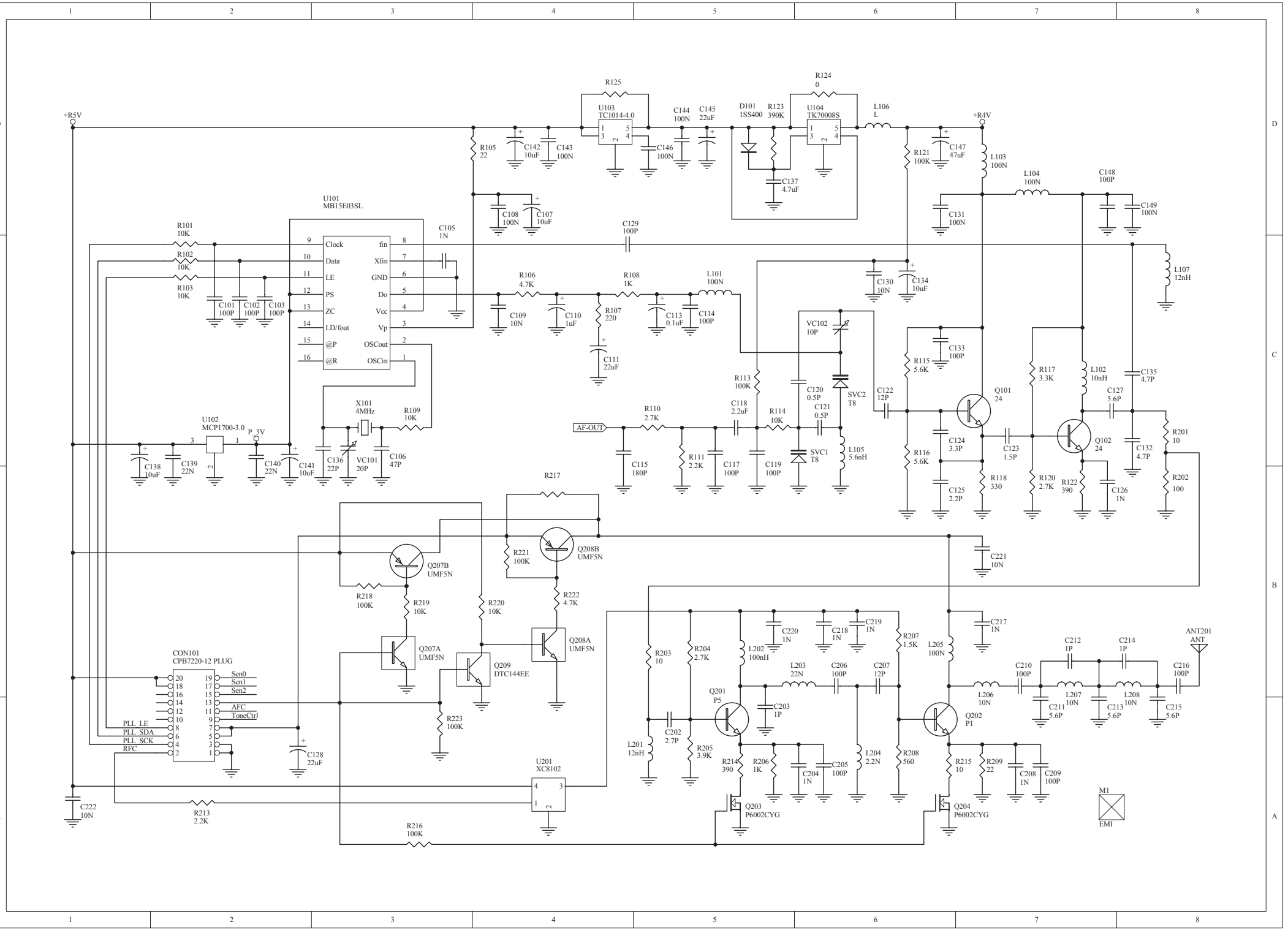
+R5V
+R4V
U103
TC1014-4.0
U104
TK70008S
R125
R124
0
D101
1SS400
R123
390K
L106
L
R105
22
C142
10uF
C143
100N
C144
100N
C145
22uF
C146
100N
C137
4.7uF
R121
100K
C147
47uF
L103
100N
L104
100N
C148
100P
C149
100N
C131
100N
C108
100N
C107
10uF
U101
MB15E03SL
Clock
Data
LE
PS
ZC
LD/fout
@P
@R
fin
Xfin
GND
Do
Vcc
Vp
OSCout
OSCin
R101
10K
R102
10K
R103
10K
C101
100P
C102
100P
C103
100P
C105
1N
C129
100P
C130
10N
C134
10uF
L107
12nH
R106
4.7K
R108
1K
L101
100N
C109
10N
C110
1uF
R107
220
C113
0.1uF
C114
100P
C111
22uF
VC102
10P
R115
5.6K
C133
100P
R113
100K
C120
0.5P
SVC2
T8
C122
12P
Q101
24
R117
3.3K
L102
10nH
C135
4.7P
C127
5.6P
Q102
24
C132
4.7P
R201
10
R202
100
C126
1N
R120
2.7K
R122
390
R118
330
C125
2.2P
C124
3.3P
R116
5.6K
C123
1.5P
X101
4MHz
R109
10K
U102
MCP1700-3.0
P_3V
C138
10uF
C139
22N
C140
22N
C141
10uF
C136
22P
VC101
20P
C106
47P
AF-OUT
R110
2.7K
C118
2.2uF
R114
10K
C121
0.5P
C115
180P
R111
2.2K
C117
100P
C119
100P
SVC1
T8
L105
5.6nH
R217
Q208B
UMF5N
R221
100K
C221
10N
Q207B
UMF5N
R218
100K
R219
10K
R220
10K
R222
4.7K
Q207A
UMF5N
Q209
DTC144EE
Q208A
UMF5N
R223
100K
CON101
CPB7220-12 PLUG
Sen0
Sen1
Sen2
AFC
ToneCtrl
PLL LE
PLL SDA
PLL SCK
RFC
C128
22uF
C222
10N
R213
2.2K
U201
XC8102
R216
100K
R203
10
R204
2.7K
L202
100nH
C220
1N
C218
1N
C219
1N
R207
1.5K
L205
100N
C217
1N
ANT201
ANT
C212
1P
C214
1P
C216
100P
C210
100P
L203
22N
C206
100P
C207
12P
L206
10N
L207
10N
L208
10N
C211
5.6P
C213
5.6P
C215
5.6P
Q201
P5
C203
1P
Q202
P1
L201
12nH
C202
2.7P
R205
3.9K
R214
390
R206
1K
C204
1N
C205
100P
L204
2.2N
R208
560
R215
10
R209
22
C208
1N
C209
100P
Q203
P6002CYG
Q204
P6002CYG
M1
EMI

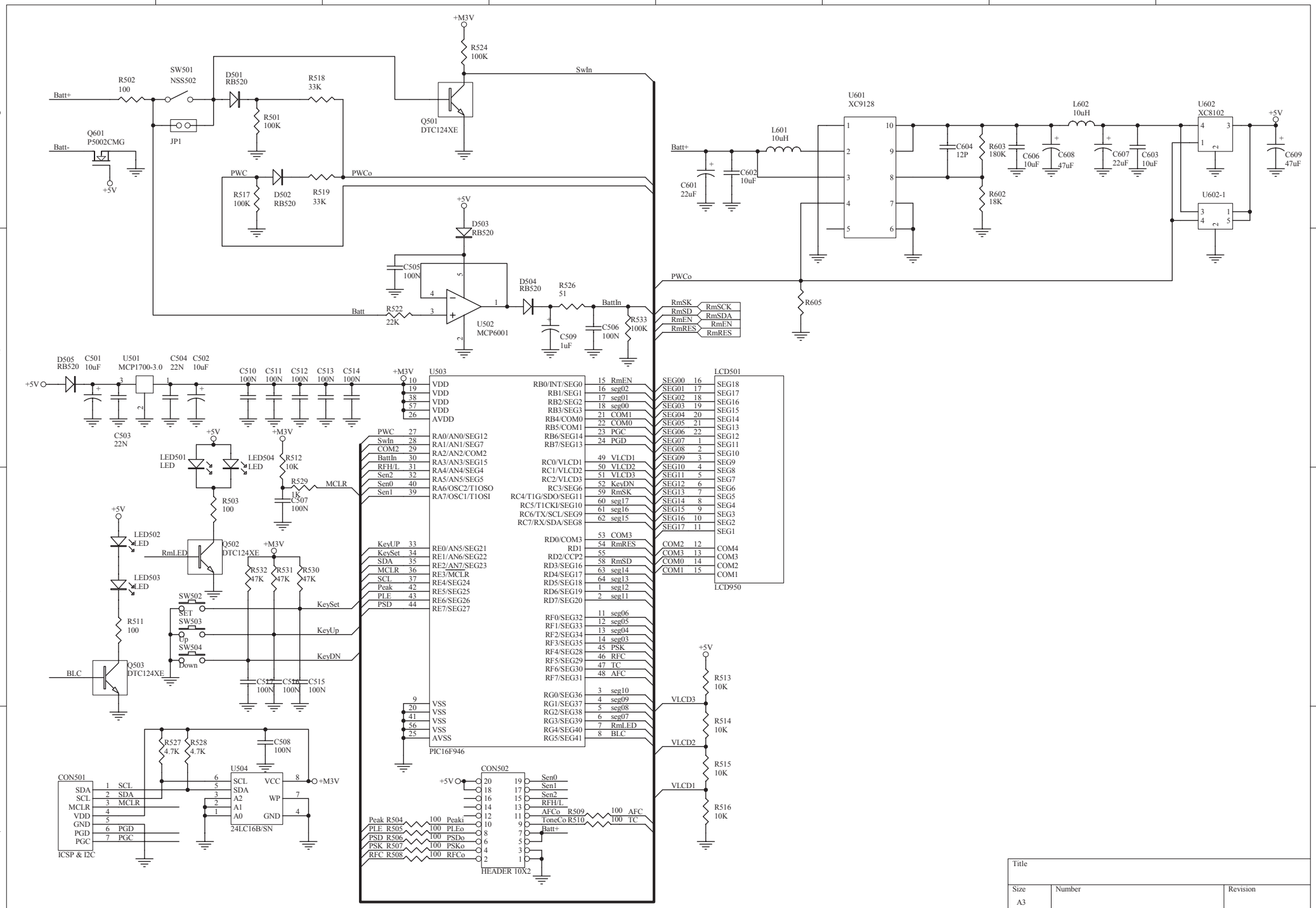

Title		
Size A3	Number	Revision
Date: 27-Sep-2010	Sheet of	
File: C:\Documents and Settings\All Users\Documents\My Design1\MyDesign1.ddb	Drawn By:	

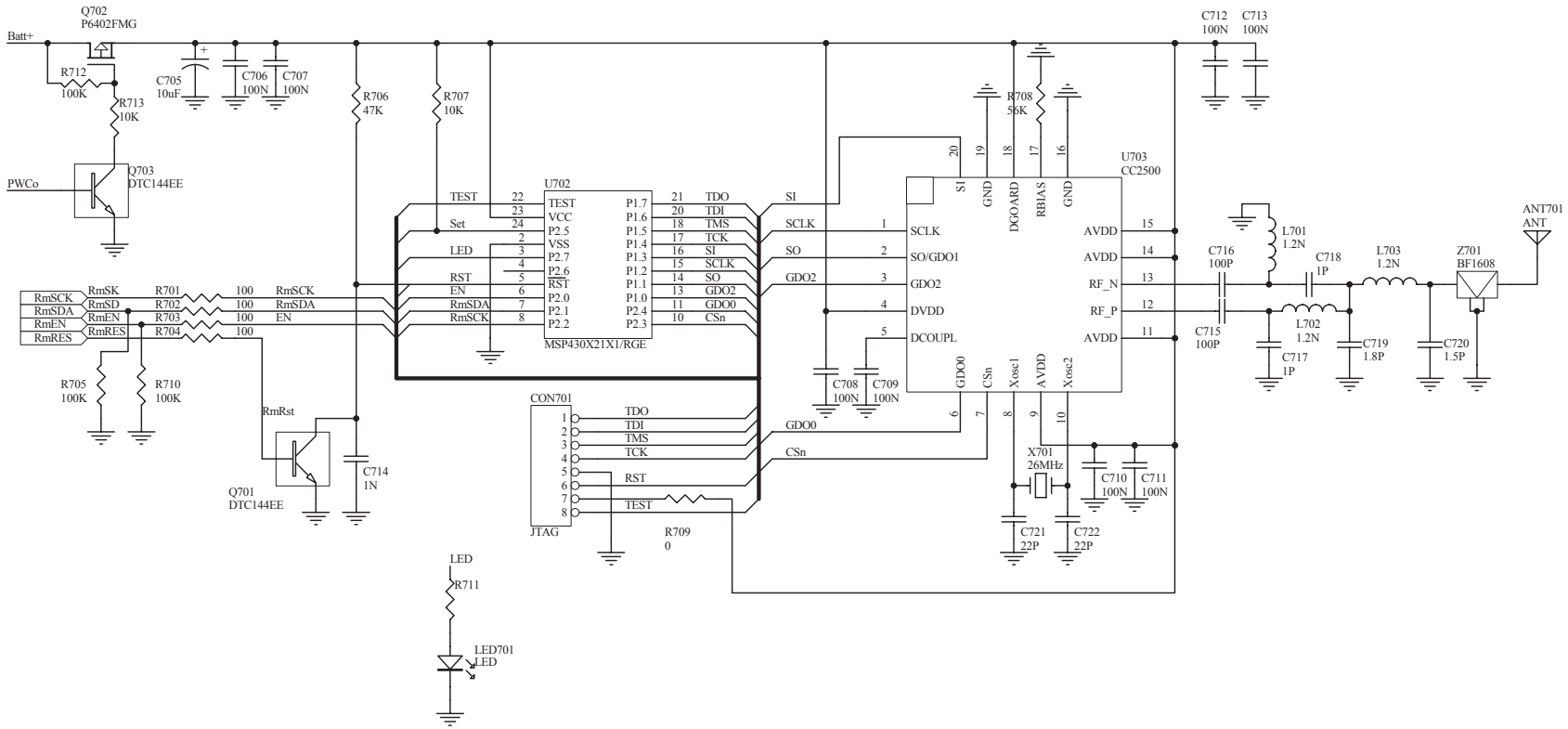
Q702
P6402FMG
Batt+
R712
100K
R713
10K
C705
10uF
C706
100N
C707
100N
R706
47K
R707
10K
PWCo
Q703
DTC144EE
U702
MSP430X21X1/RGE
TEST
Set
LED
RST
EN
RmSDA
RmSCK
TEST
VCC
P2.5
VSS
P2.7
P2.6
RST
P2.0
P2.1
P2.2
P1.7
P1.6
P1.5
P1.4
P1.3
P1.2
P1.1
P1.0
P2.4
P2.3
TDO
TDI
TMS
TCK
SI
SCLK
SO
GDO2
GDO0
CSn
RmSK
RmSD
RmEN
RmRES
R701
R702
R703
R704
100
RmSCK
RmSDA
EN
R705
100K
R710
100K
RmRst
Q701
DTC144EE
C714
1N
CON701
JTAG
TDO
TDI
TMS
TCK
RST
TEST
R709
0
LED
R711
LED701
LED
C708
100N
C709
100N
U703
CC2500
SI
GND
DGOARD
RBIAS
GND
SCLK
SO/GDO1
GDO2
DVDD
DCOUPL
GDO0
CSn
Xosc1
AVDD
Xosc2
AVDD
RF_N
RF_P
R708
56K
X701
26MHz
C710
100N
C711
100N
C721
22P
C722
22P
C712
100N
C713
100N
C716
100P
C715
100P
L701
1.2N
L702
1.2N
C717
1P
C718
1P
L703
1.2N
C719
1.8P
C720
1.5P
Z701
BF1608
ANT701
ANT