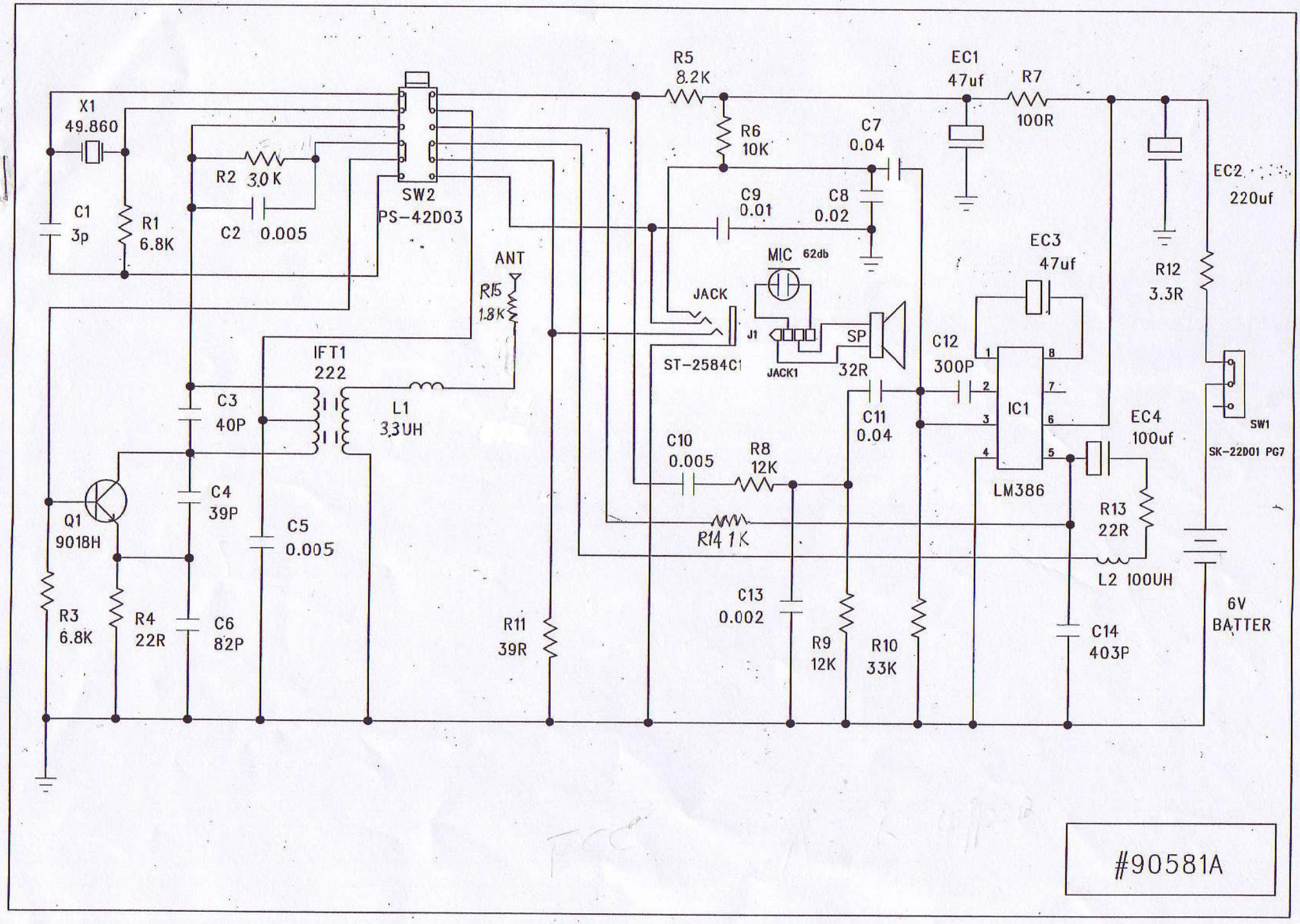
X1
49.860
C1
3p
R1
6.8K
R2 3.0K
C2 0.005
SW2
PS-42D03
ANT
R15
1.8K
IFT1
222
L1
3.3UH
C3
40P
C4
39P
C5
0.005
C6
82P
Q1
9018H
R3
6.8K
R4
22R
R11
39R
R5
8.2K
R6
10K
C7
0.04
C9
0.01
C8
0.02
MIC 62db
JACK
J1
ST-2584C1
JACK1
SP
32R
C11
0.04
C10
0.005
R8
12K
R14 1K
C13
0.002
R9
12K
R10
33K
EC1
47uf
R7
100R
EC3
47uf
C12
300P
IC1
LM386
EC4
100uf
R13
22R
L2 100UH
C14
403P
R12
3.3R
EC2
220uf
SW1
SK-22D01 PG7
6V
BATTER
#90581A