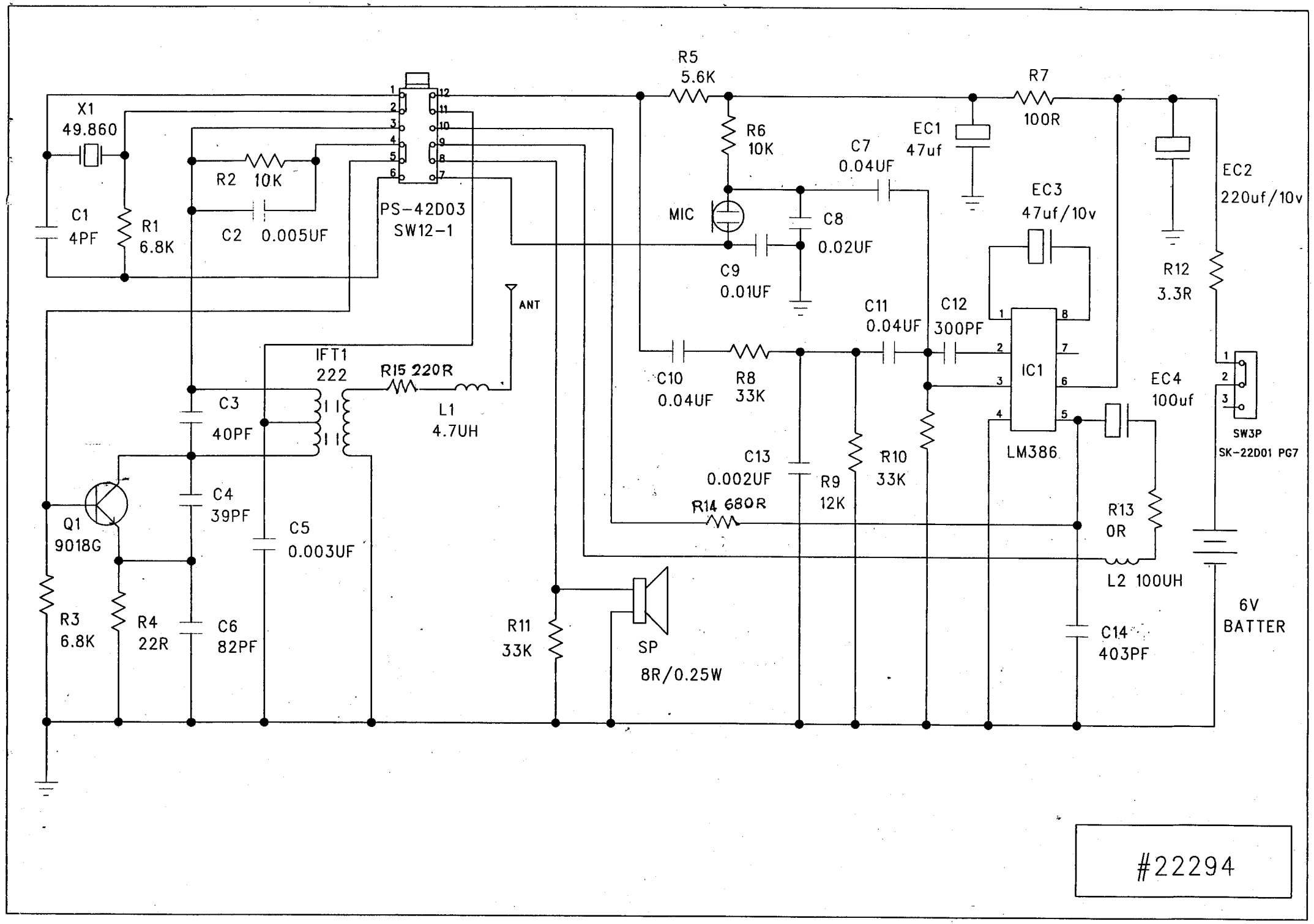

22294-1.sch-1 - Wed Feb 07 10:59:58 2007