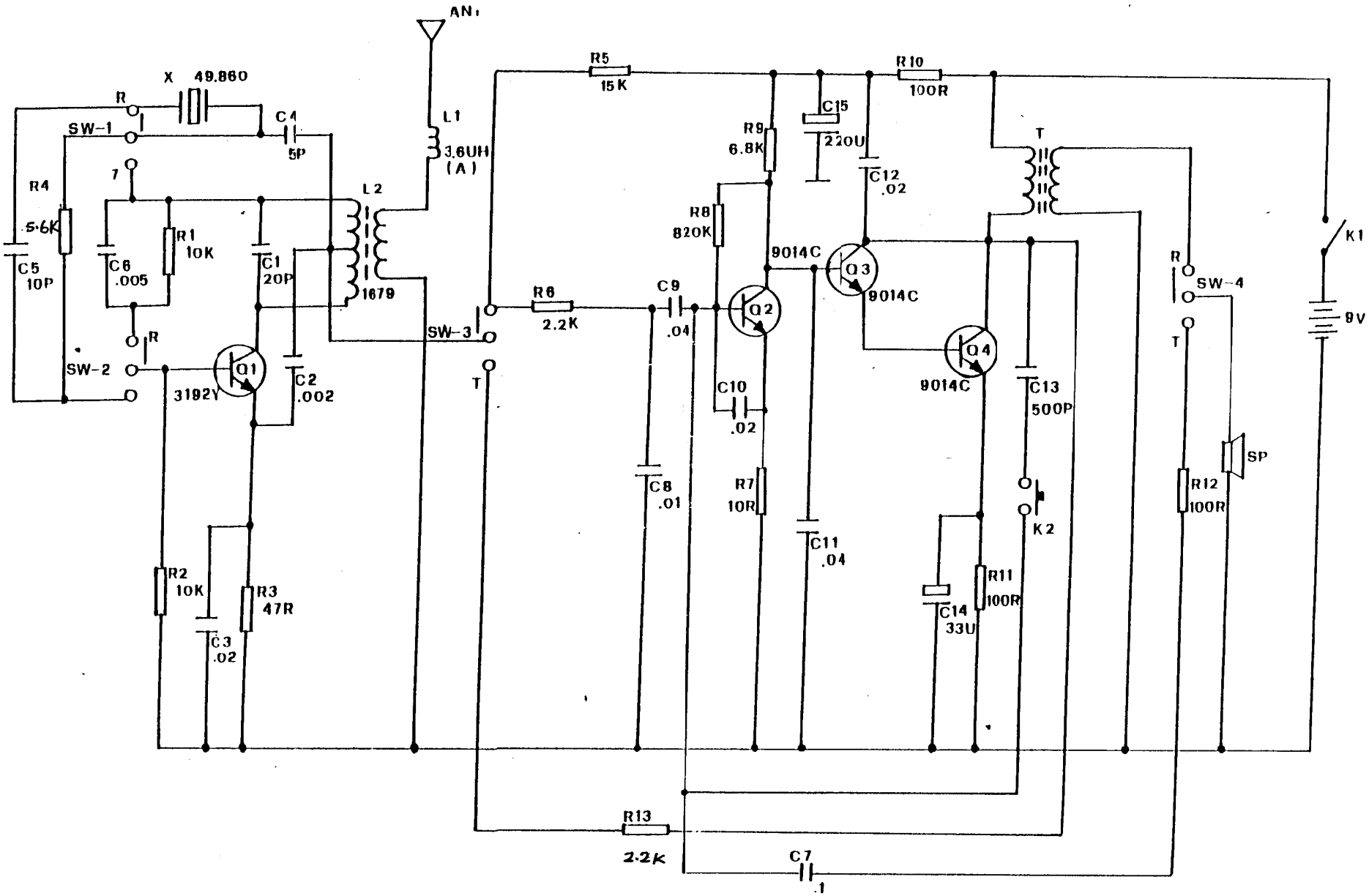

MODEL: 22100 (49.860 MHz)