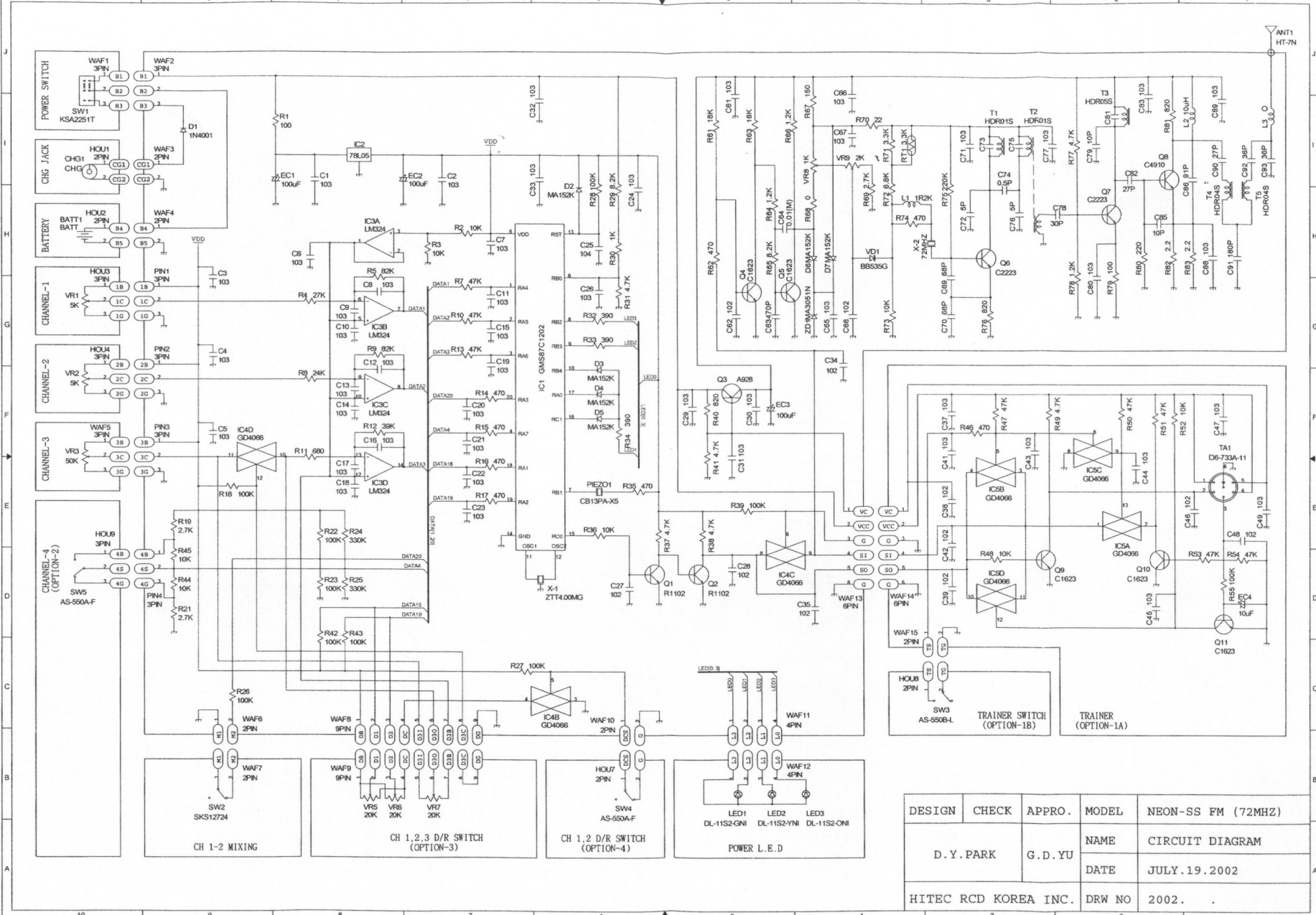

DESIGN	CHECK	APPRO.	MODEL	NEON-SS FM (72MHZ)
D.Y.PARK		G.D.YU	NAME	CIRCUIT DIAGRAM
			DATE	JULY.19.2002
HITEC RCD KOREA INC.			DRW NO	2002. .