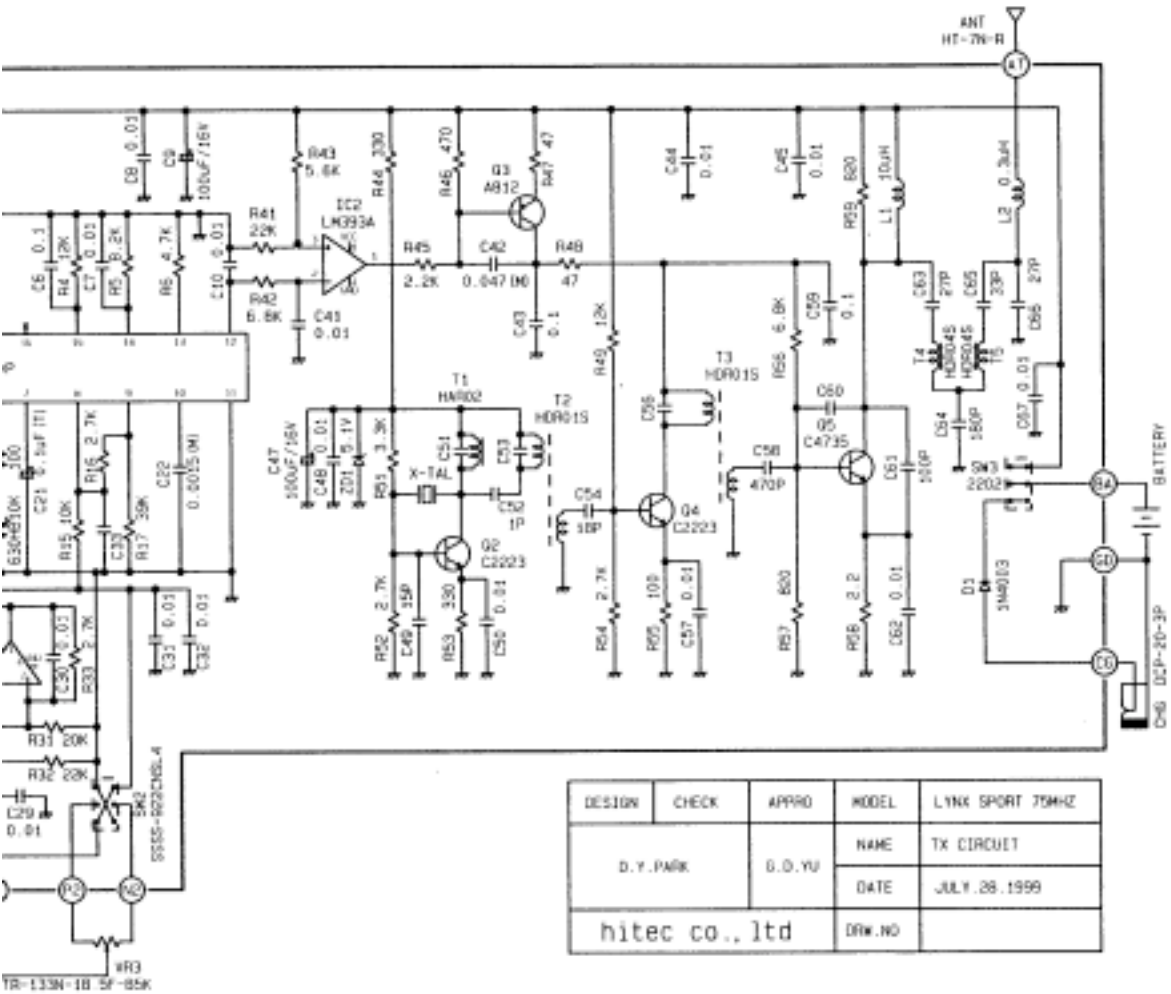
ANT
HT-7N-R
A1
BATTERY
P4
P0
P6
CN6 DCP-20-3P
IC2
LM393A
Q3
A812
Q2
C2223
Q4
C2223
Q5
C4735
T1
HA802
T2
HDR01S
T3
HDR01S
T4
HDR045
T5
HDR045
X-TAL
SW3
2202
D1
1N4003
SW2
SSSS-822CNSL-A
VR3
TR-133N-1B 5F-85K
DESIGN
CHECK
APPRO
MODEL
LYNX SPORT 75MHZ
D.Y.PARK
G.D.YU
NAME
TX CIRCUIT
DATE
JULY.28.1999
hitec co.,ltd
DRW.NO