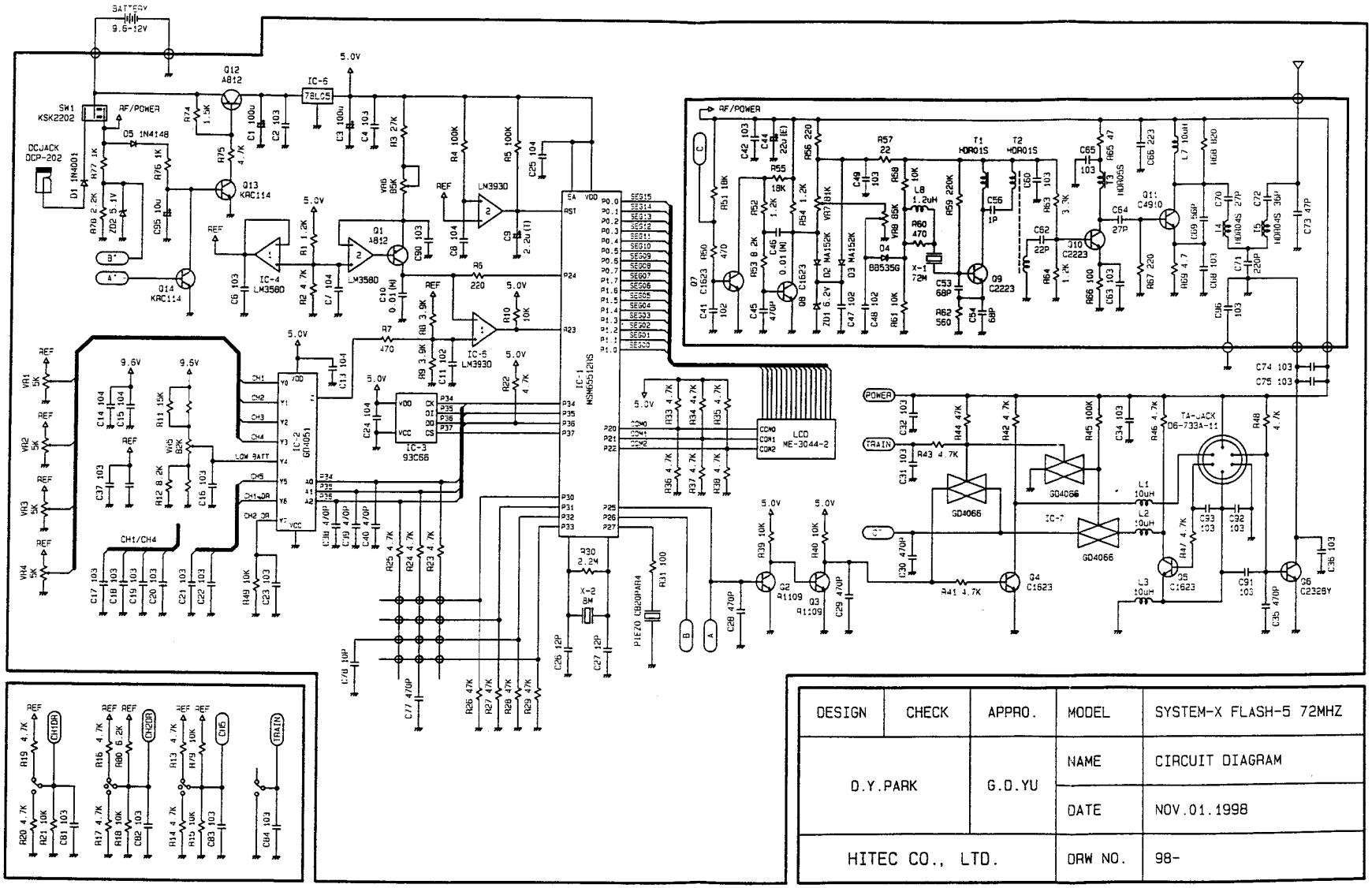

DESIGN	CHECK	APPRO.	MODEL	SYSTEM-X FLASH-5 72MHZ
D.Y.PARK		G.D.YU	NAME	CIRCUIT DIAGRAM
			DATE	NOV.01.1998
HITEC CO., LTD.			DRW NO.	98-