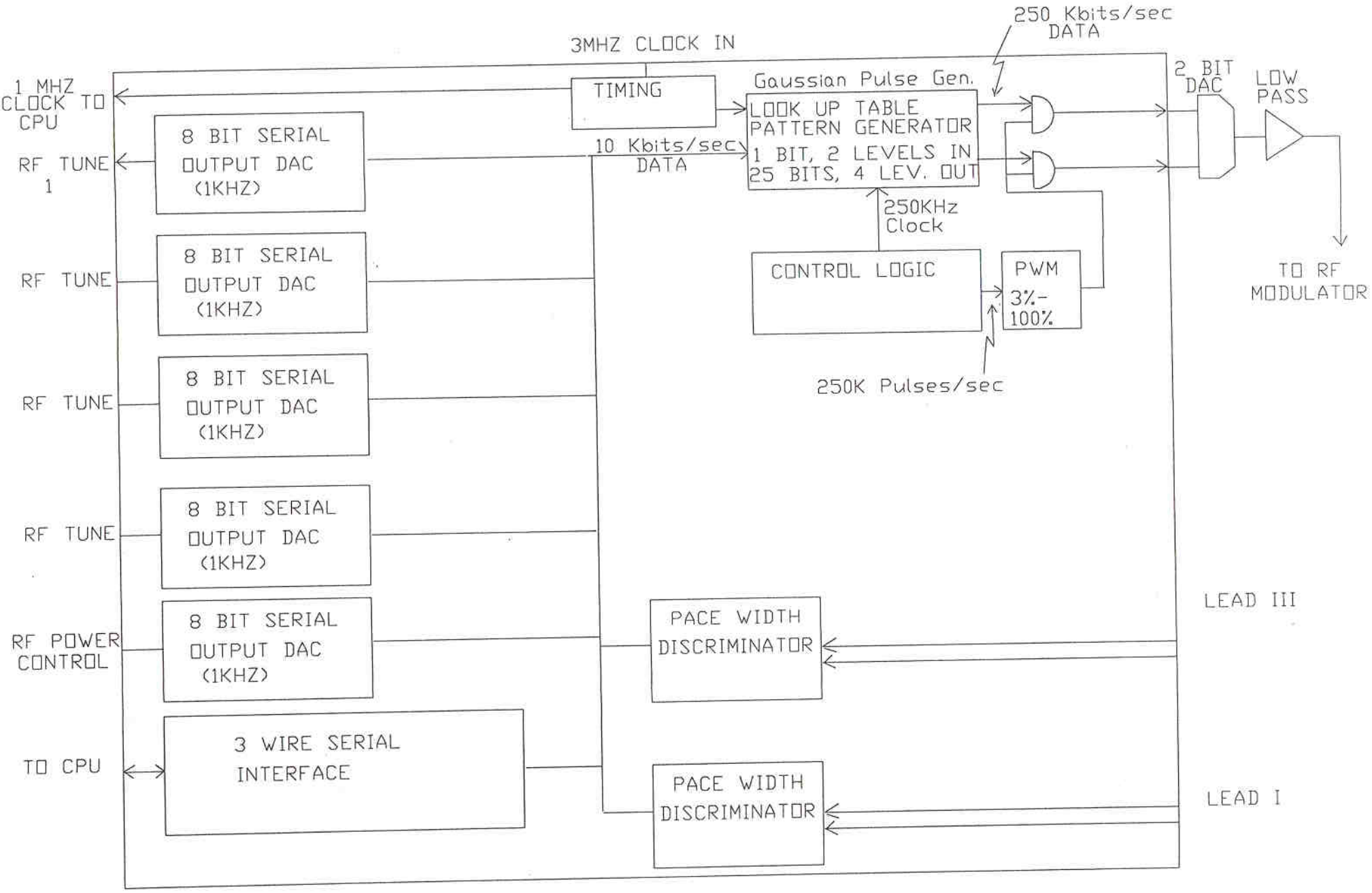TRANSMITTER ASIC