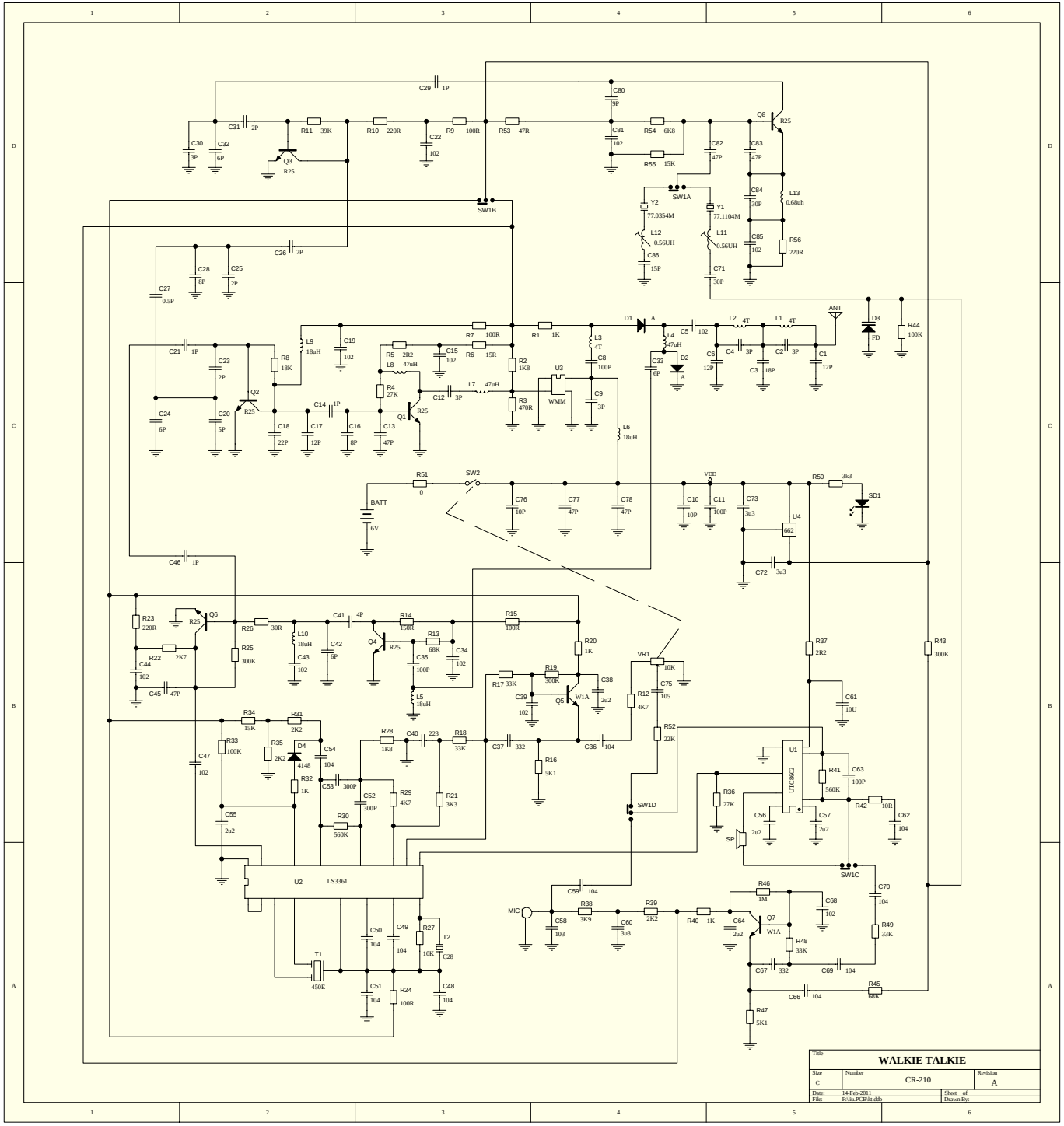

Title		
WALKIE TALKIE		
Size: C	Number: CR-210	Revision: A
Date: 14-Feb-2011		Sheet of
File: F:\Ha\PCB\at.ddb		Drawn By: