NOTES: (UNLESS OTHERWISE SPECIFIED)

1. PEEL PAPER FROM ANTI-THEFT LABEL (ITEM 22) AND ATTACH TO INSIDE BOTTOM OF BOX (ITEM 7).
2. ATTACH LABEL (ITEM 14) TO EACH ARM (ITEM 1) ON EACH SIDE AS SHOWN.
3. INSERT EACH ARM (ITEM 1) INTO PLASTIC BAG THAT WAS INCLUDED WITH ARM PLASTICS ( PART OF ITEM 1) FROM VENDOR.
4. APPLY GLUE (ITEM 20)ALONG LINES AS SHOWN ON BOX (ITEM 7), THEN APPLY HOT MELT GLUE (ITEM 27) TO TIGHTLY SEAL BOX (ITEM 7) CLOSED.
5. PLACE LABEL (ITEM 28) IN APPROXIMATE LOCATION SHOWN ON EXTERIOR BOTTOM OF UNIT BOX (ITEM 7). DO NOT COVER ANY TEXT.

| REVISIONS | | | |
|---|---|---|---|
| REV | DESCRIPTION | DATE | APPROVED |
| A | INITIAL PRODUCTION | 3/22/2019 | ECO-025403 |
| B | ADD HOT GLUE. UPDATE NOTE 4 | 6/26/2019 | ECO-025871 |
| C | UPDATE NOTE 5 AND MOVE ITEM 28 | 7/30/2019 | ECO-026048 |

LABEL,FCC/DOC,MMS100 BRIDGE
MFG. PROCESS: PRINTED LABEL OR PAD PRINTING LABEL INK: PERMANENT WHITE
LABEL MATERIAL: CLEAR ACETATE, ADHESIVE BACKED THICKNESS: .0015"
PAD PRINTING INK: WHITE (MAXCIM P/N 213337-001) SCALE: 1-1

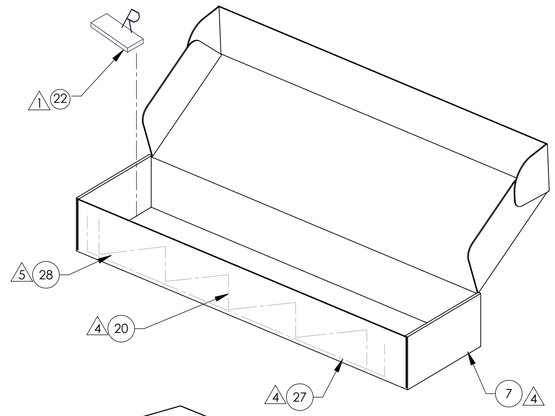


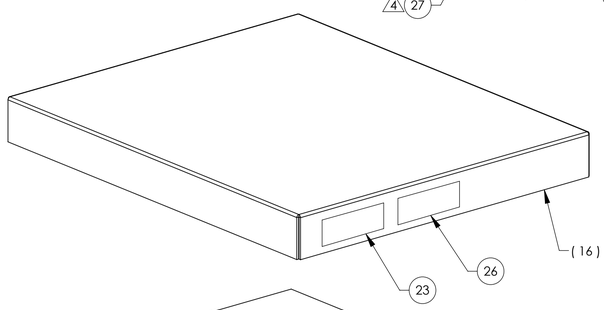


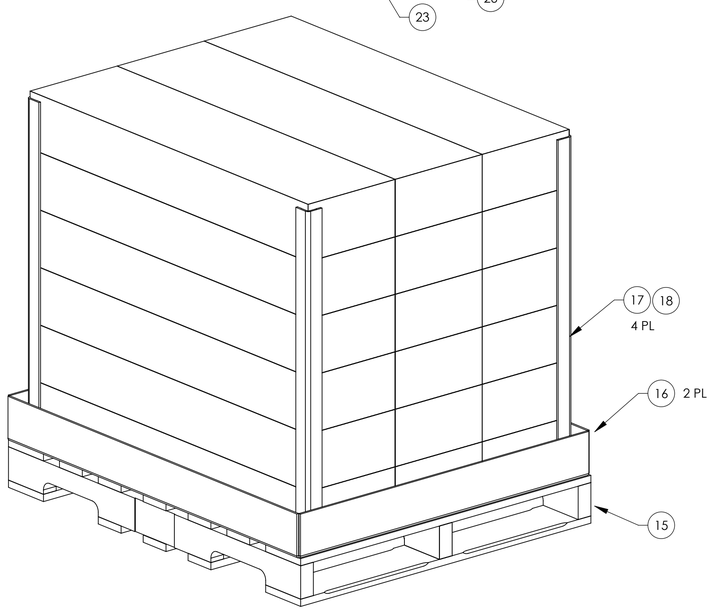


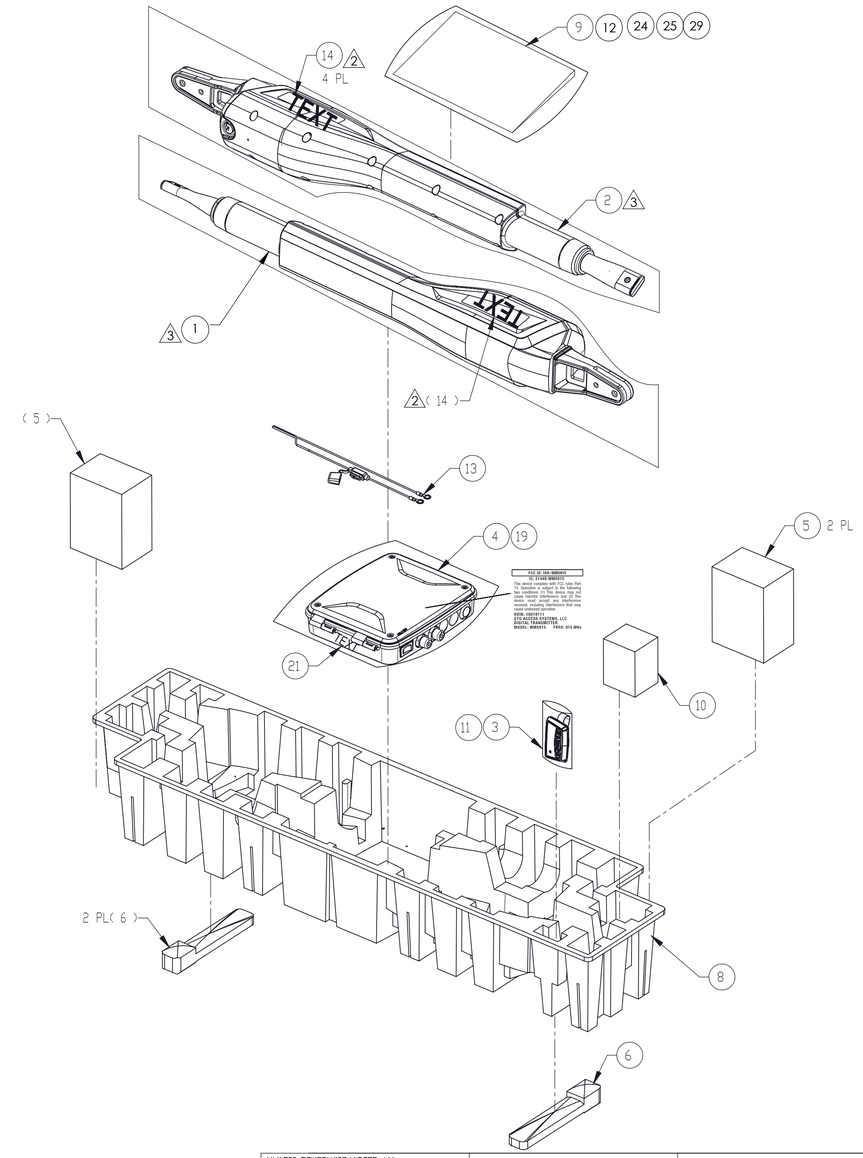


THE INFORMATION CONTAINED IN THIS DRAWING IS THE SOLE PROPERTY OF NORTEK SECURITY & CONTROL. ANY REPRODUCTION IN PART OR AS A WHOLE WITHOUT WRITTEN PERMISSION OF NORTEK SECURITY & CONTROL IS PROHIBITED.
© 2018 Nortek Security & Control LLC.

UNLESS OTHERWISE NOTED ALL DIMENSIONS ARE INCHES [MM]:

TOLERANCES:
DECIMALS .XX±.01 [.3] .XXX±.005 [.13]
ANGLES: ± 0.5°
ROUNDNESS:±.005 [.13]
FLATNESS: ±.005 [.13]
CONCENTRICITY:±.005 [.13]

MATERIAL:

FINISH:

DO NOT SCALE DRAWING

PROJECT:

| | | |
|---|---|---|
| CAD OPERATOR: | BOWMAN SHAW | DATE 1/23/2017 |
| CHECKED: | YM LIU | DATE 2017/1/24 |
| APPROVED: | | DATE |
| APPROVED: | | DATE |
| APPROVED: | | DATE |
| APPROVED: | | DATE |

NORTEK™ SECURITY & CONTROL

TITLE: F/G DWG MM372W

SIZE: D

DRAWING NO.: 10020891

REV.: C

SCALE:

SHEET: 1 OF 1