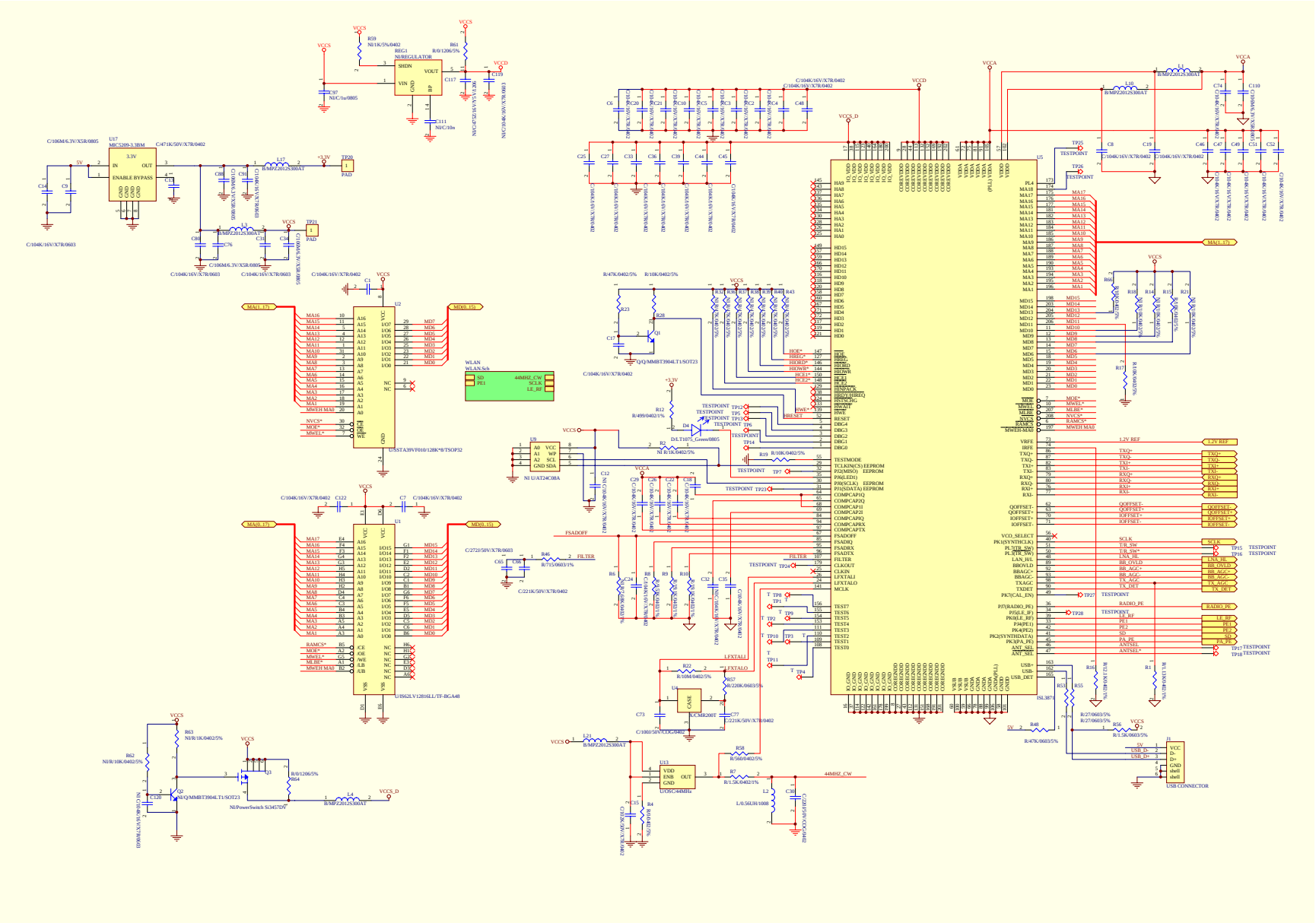
U17
MIC5209-3.3BM
3.3V
IN
OUT
ENABLE BYPASS
GND
C471K/50V/X7R/0402
C/106M/6.3V/X5R/0805
C/104K/16V/X7R/0603
C/104K/16V/X7R/0402
L47
B/MPZ2012S300AT
+3.3V
TP20
PAD
TP21
VCCS
VCCD
VCCA
VCCS_D
REG1
NI/REGULATOR
SHDN
VIN
VOUT
BP
R59
NI/1K/5%/0402
R61
R/0/1206/5%
C117
C119
C/97
NI/C/1u/0805
L14
C111
NI/C/10u
N/C/47/50/16V/5%/X5R
N/C/10/40/16V/X7R/0603
U2
U1
U5
U9
U13
U/SST39VF010/128K*8/TSOP32
U/IS62LV12816LL/TF-BGA48
U/OSC/44MHz
NI UAT24C08A
WLAN
WLAN.Sch
SD
PE1
44MHZ_CW
SCLK
LE_RF
MA(1..17)
MD(0..15)
MA(0..17)
NVCS*
MOE*
MWEL*
MWEH MA0
RAMCS*
MLBE*
FSADOFF
FILTER
LFXTAL1
LFXTAL0
R/47K,0402/5%
R/10K/0402/5%
Q/Q/MMBT3904LT1/SOT23
D/LT1075_Green/0805
R/499/0402/1%
R/10K/0402/5%
R/715/0603/1%
C/2221K/50V/X7R/0402
C/272/50V/X7R/0603
R/10M/0402/5%
R/220K/0603/5%
R/560/0402/5%
R/1.5K/0402/1%
L/0.56UH/1008
R/270/0603/5%
R/1.5K/0603/5%
R/47K/0603/5%
R/0/1206/5%
R62
NI/R/10K/0402/5%
R63
NI/R/1K/0402/5%
NI/PowerSwitch Si3457DV
TESTPOINT
USB CONNECTOR
USB_D-
USB_D+
1.2V REF
TXQ+
TXQ-
TXI+
TXI-
RXQ+
RXQ-
RXI+
RXI-
QOFFSET-
QOFFSET+
IOFFSET+
IOFFSET-
SCLK
TB_SW*
LNA_HL
BB_OVLD
BB_AGC+
BB_AGC-
TX_AGC
TX_DET
RADIO_PE
LE_RF
PE1
PE2
SD
PA_PE
ANTSEL
ANTSEL*
TP15
TP16
TP17
TP18
TP19
TP20
TP21
TP22
TP23
TP24
TP25
TP26
TP27
TP28

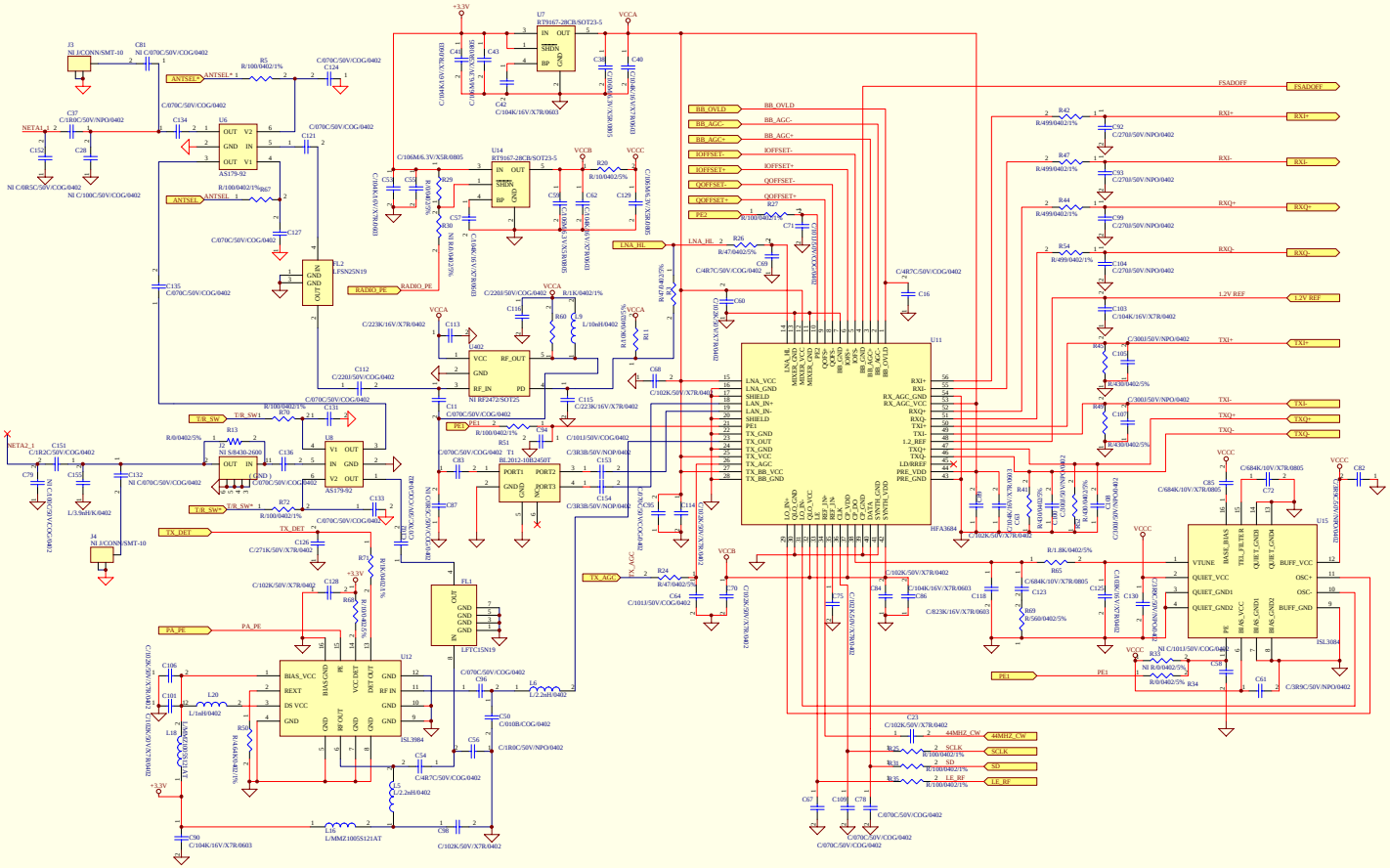
U11
HFA3684
U12
ISL3984
U15
ISL3984
U14
RT9167-28CB/SOT23-5
U7
RT9167-28CB/SOT23-5
U6
AS179-92
U8
AS179-92
U2
RF2472/SOT25
T1
BL2012-10B2450T
FL1
LFTC15N19
L2
LFSN25N19
J3
NI J/CONN/SMT-10
J4
NI J/CONN/SMT-10
NETA1
NETA2_1
ANTSEL*
ANTSEL
RADIO_PE
T/R_SW
T/R_SW*
TX_DET
PA_PE
TX_AGC
PE1
LNA_HL
BB_OVLD
BB_AGC-
BB_AGC+
IOFFSET-
IOFFSET+
QOFFSET-
QOFFSET+
PE2
FSADOFF
RXI+
RXI-
RXQ+
RXQ-
1.2V REF
TXI+
TXI-
TXQ+
TXQ-
44MHZ_CW
SCLK
SD
LE_RF
VCCA
VCCB
VCCC
+3.3V