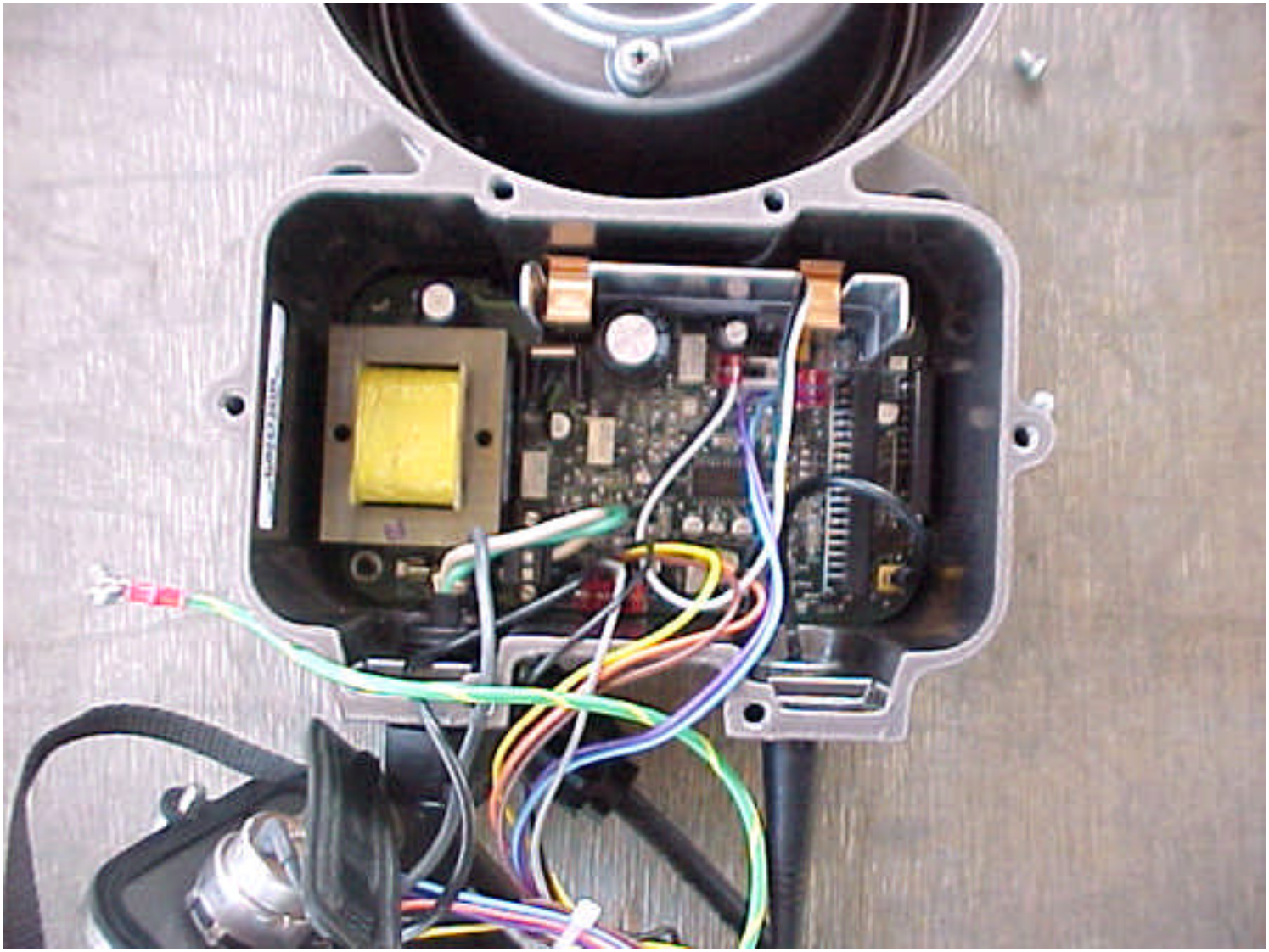

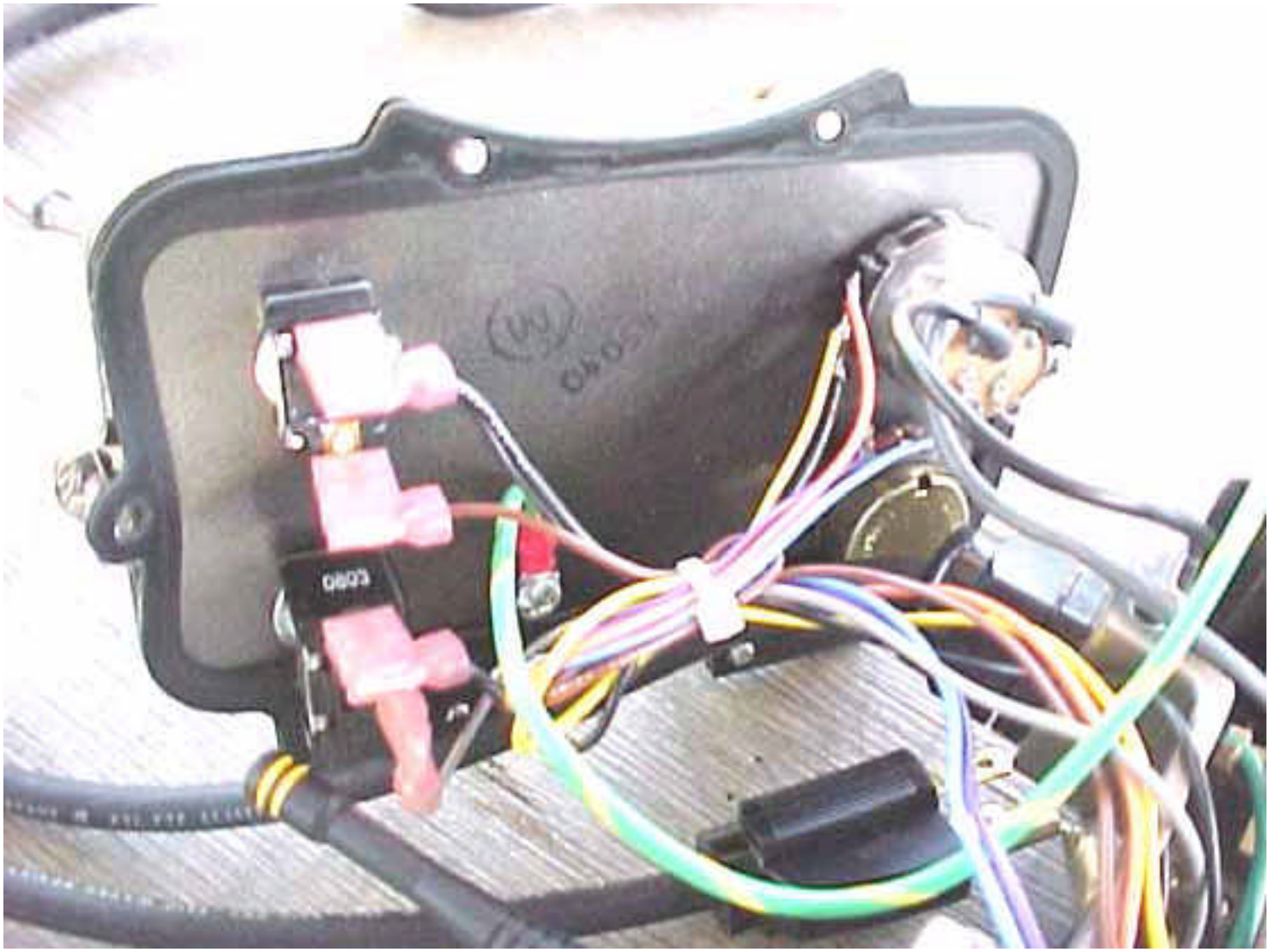
0603

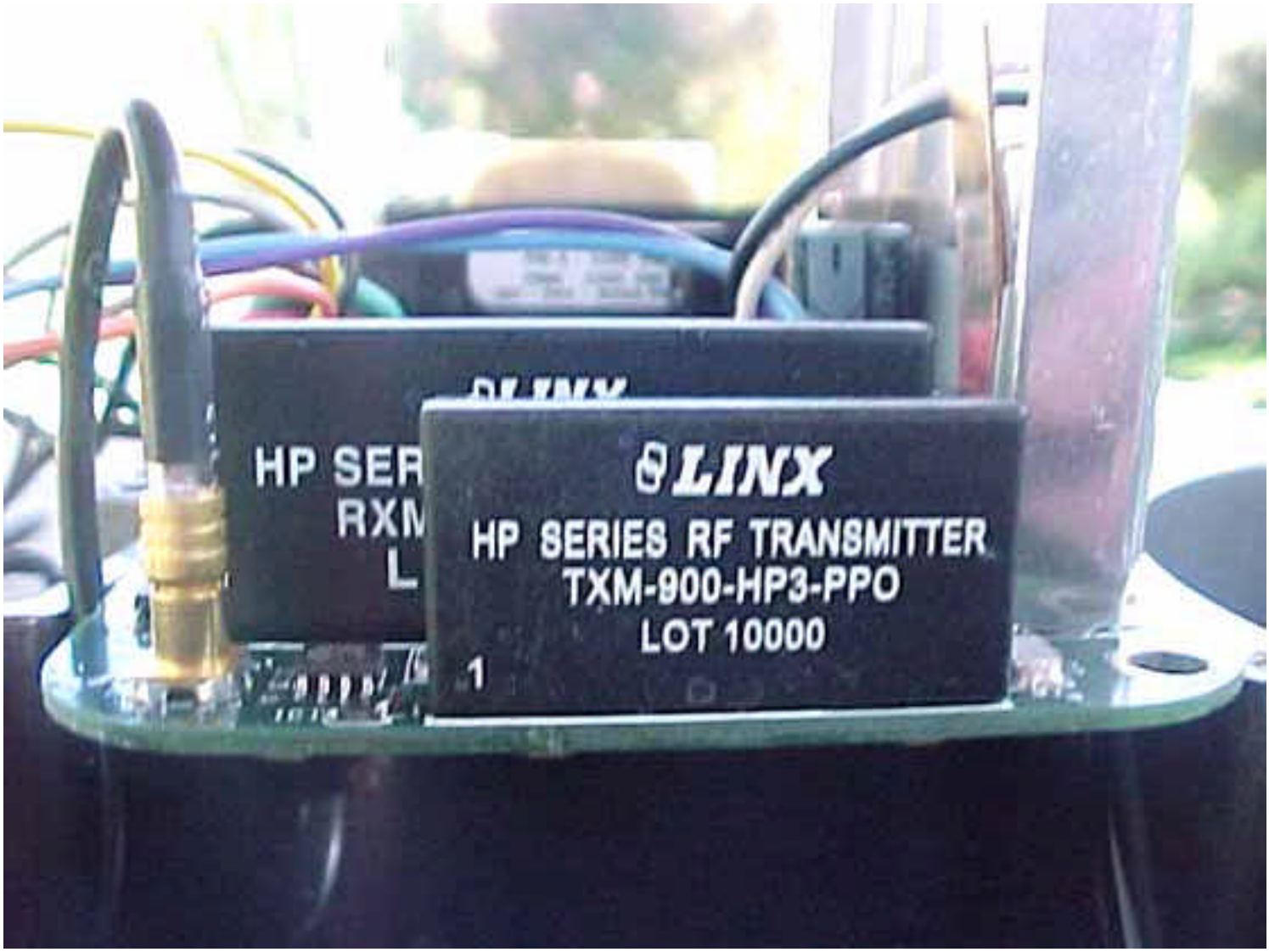
LINX
HP SERIES RF TRANSMITTER
TXM-900-HP3-PPO
LOT 10000
1

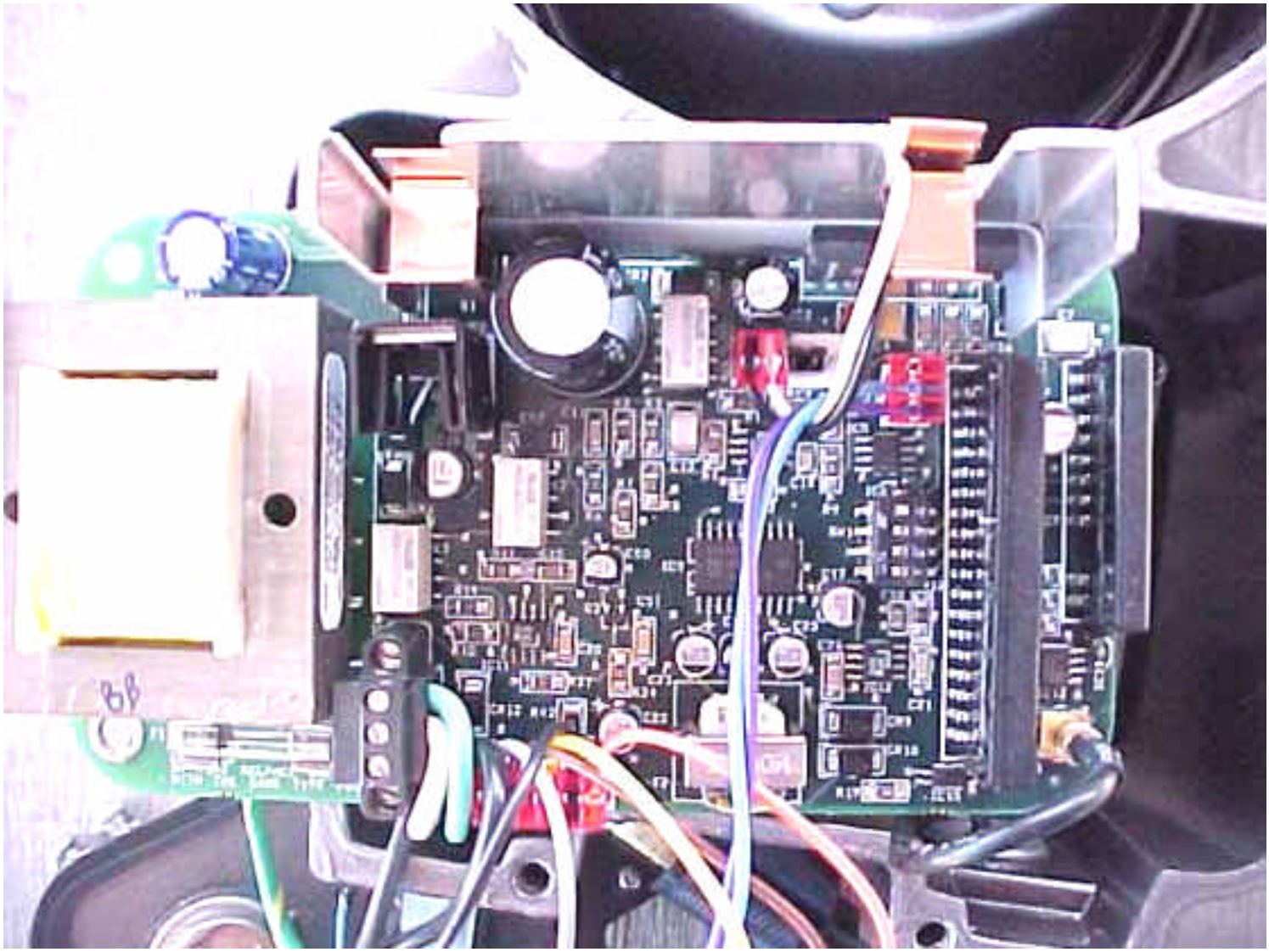

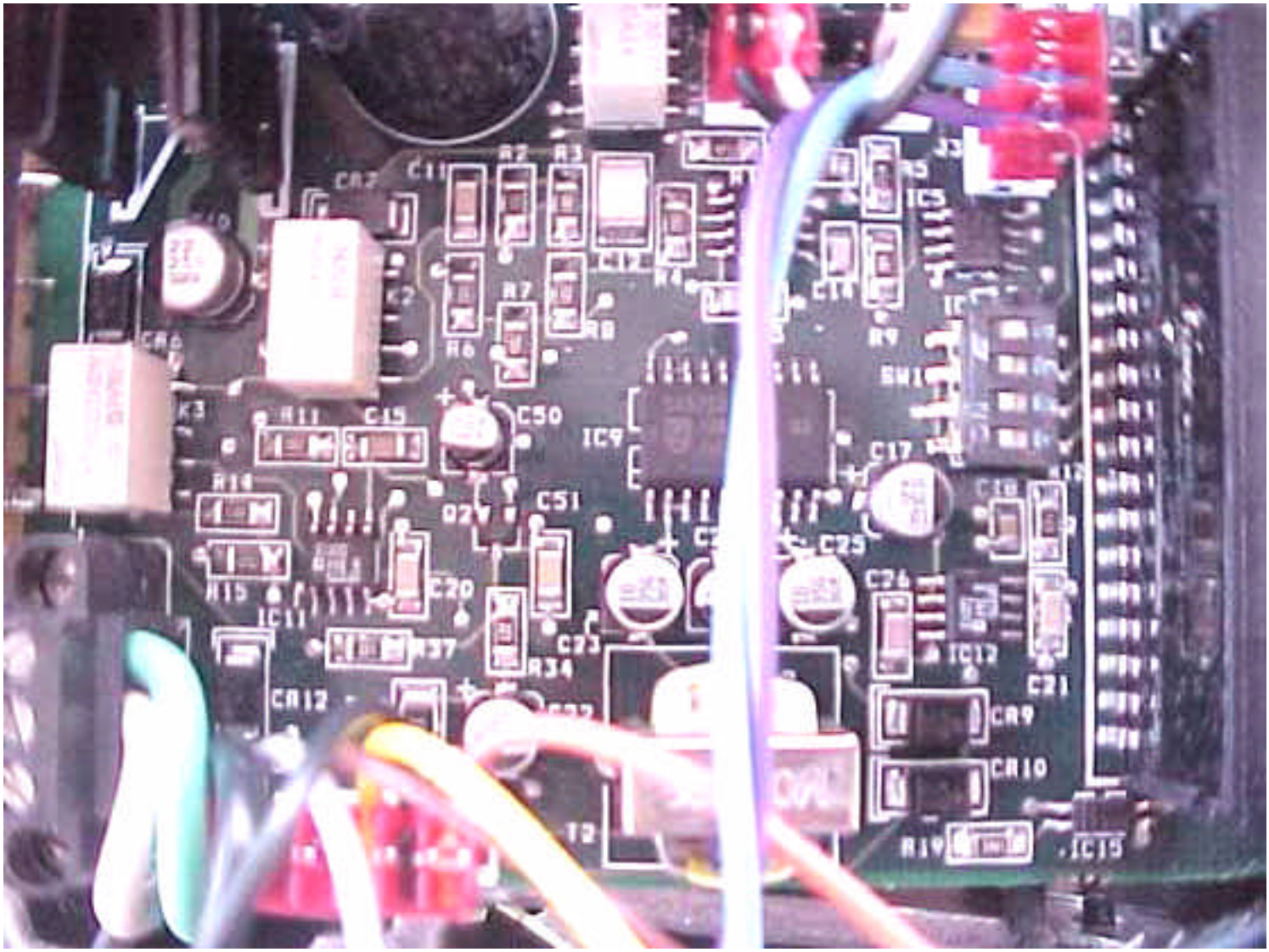
CR7
C11
R2
R3
R7
R6
R8
R9
C15
C50
IC9
C51
C20
C23
R34
R37
IC11
CR12
C17
C25
C26
IC12
C21
CR9
CR10
R19
IC15
SW1
T2

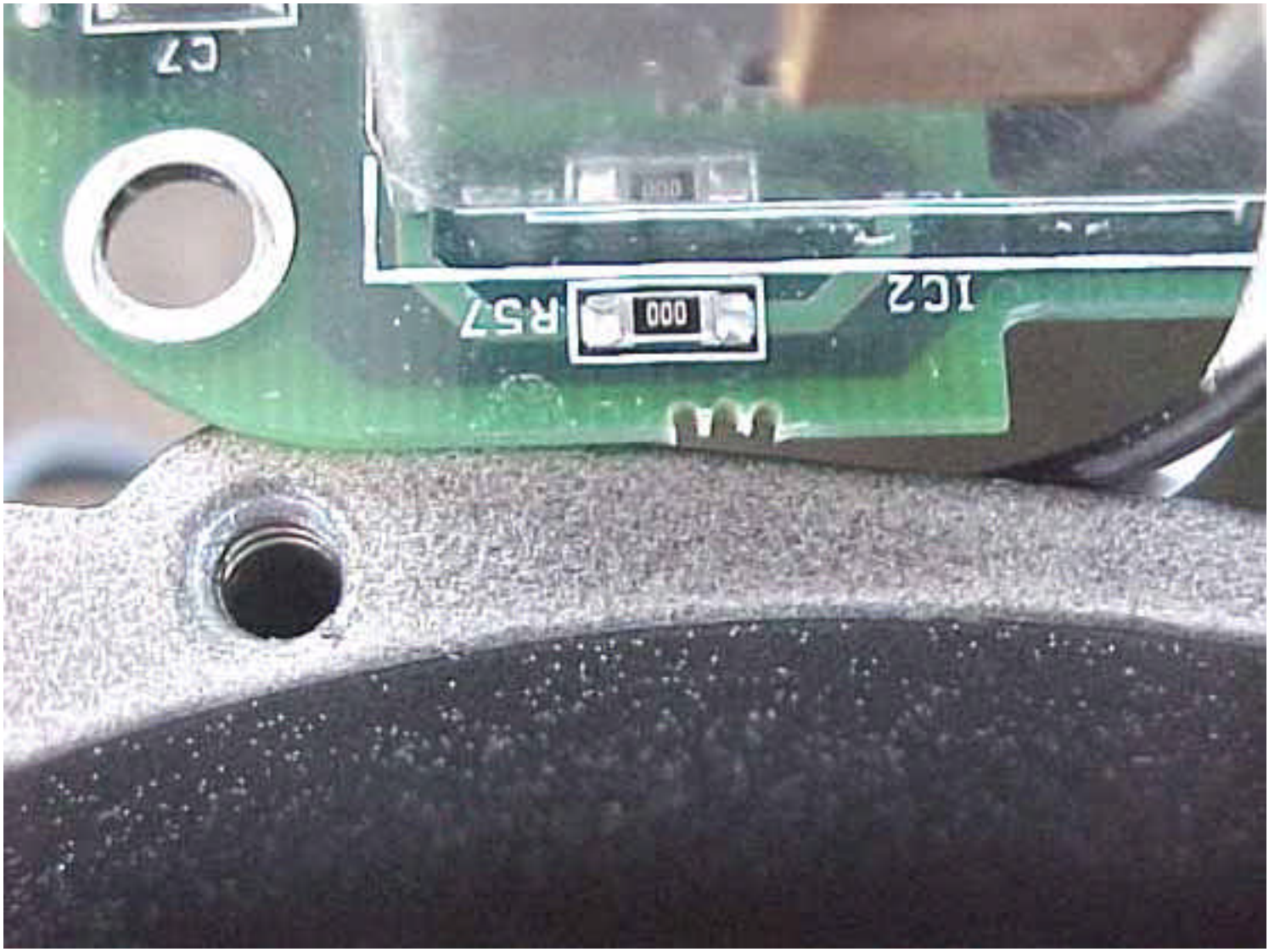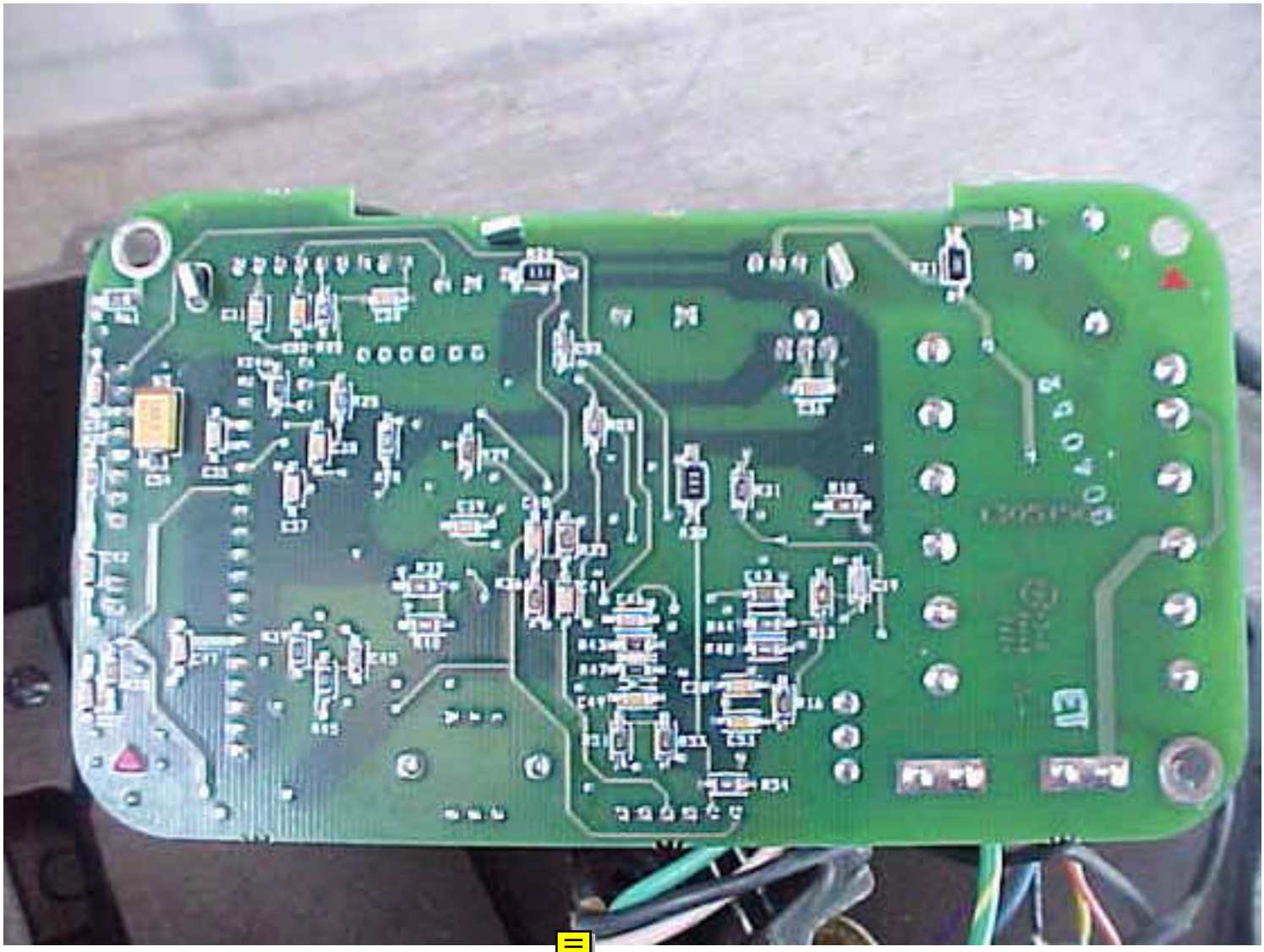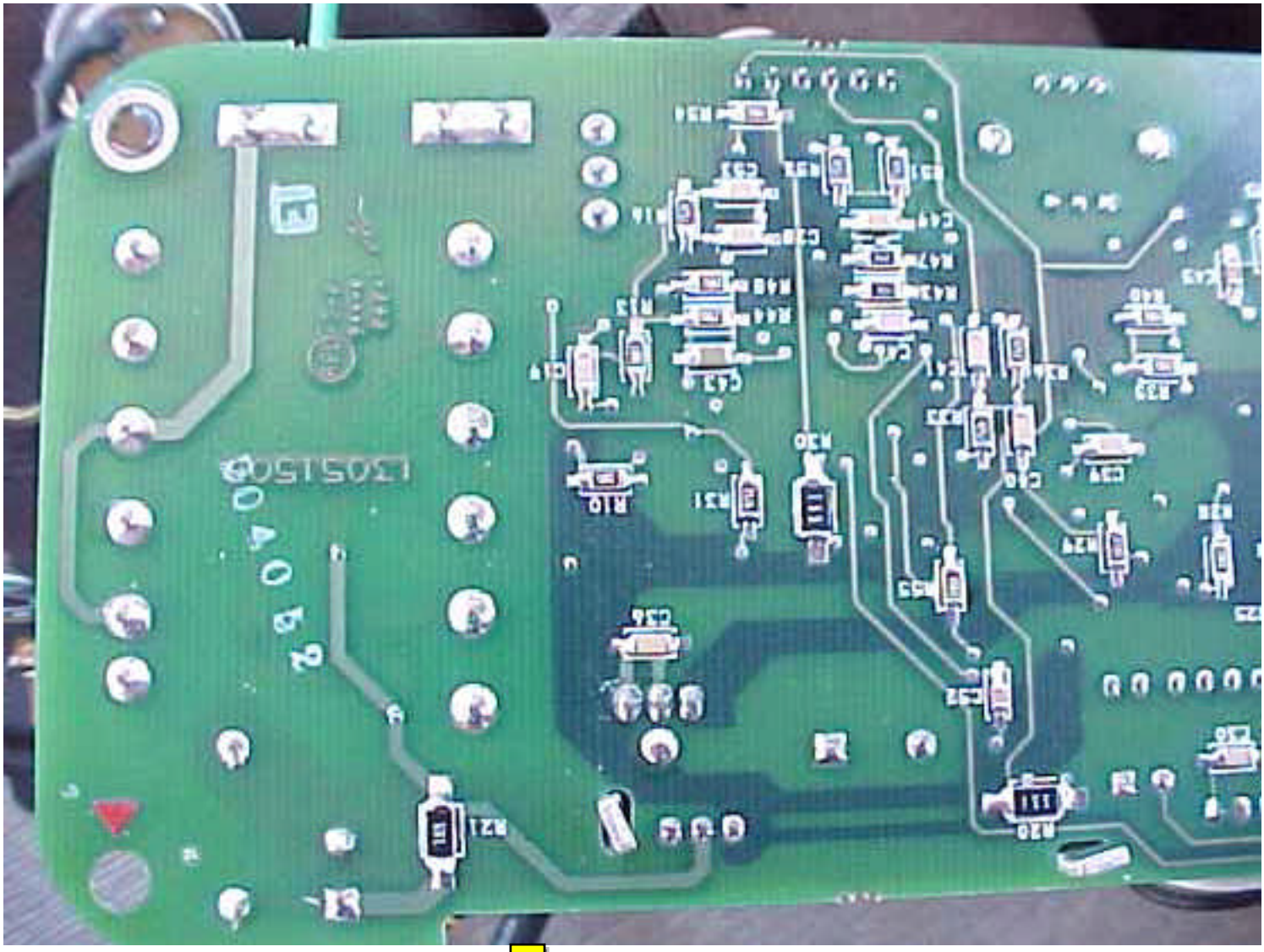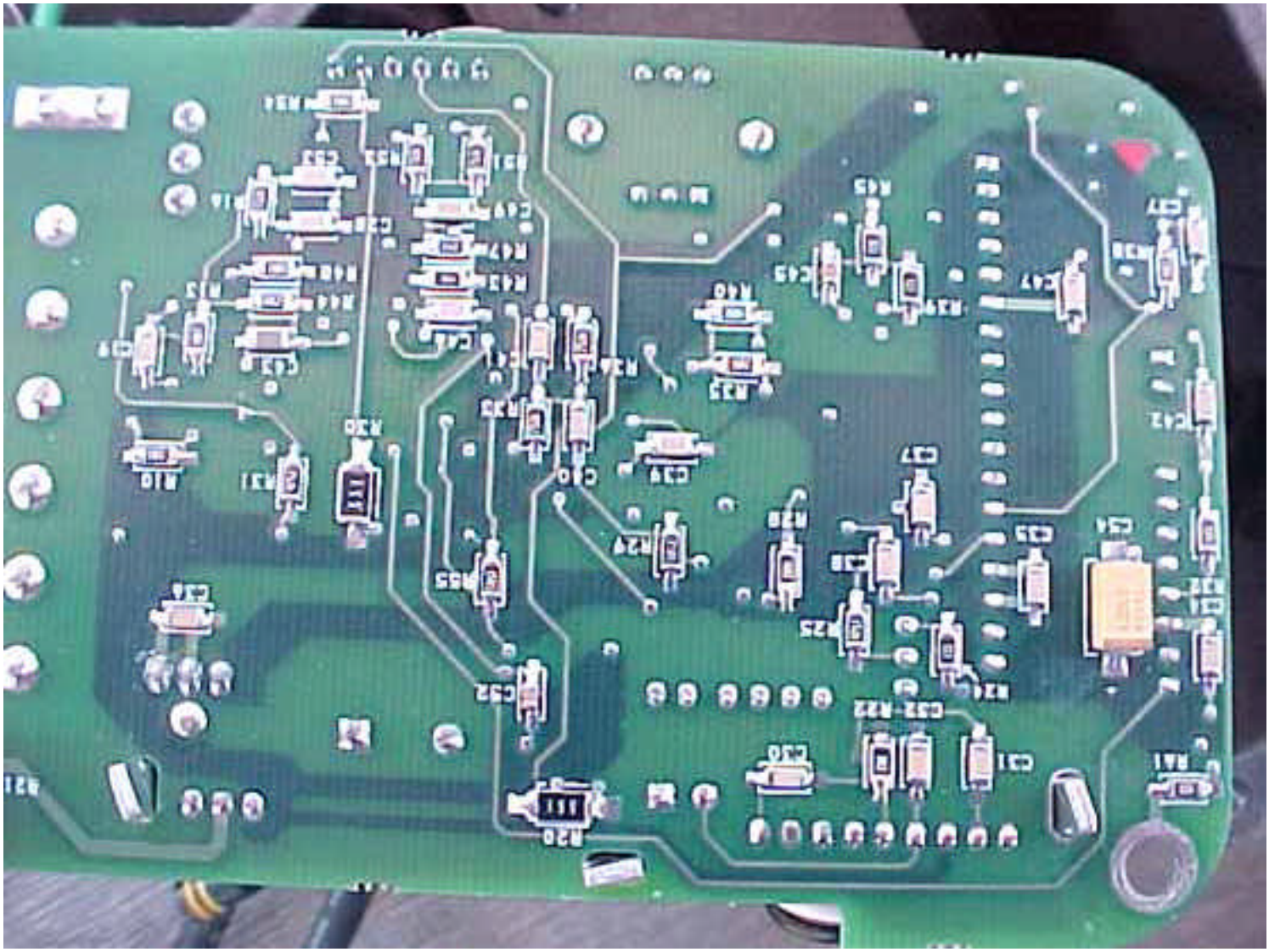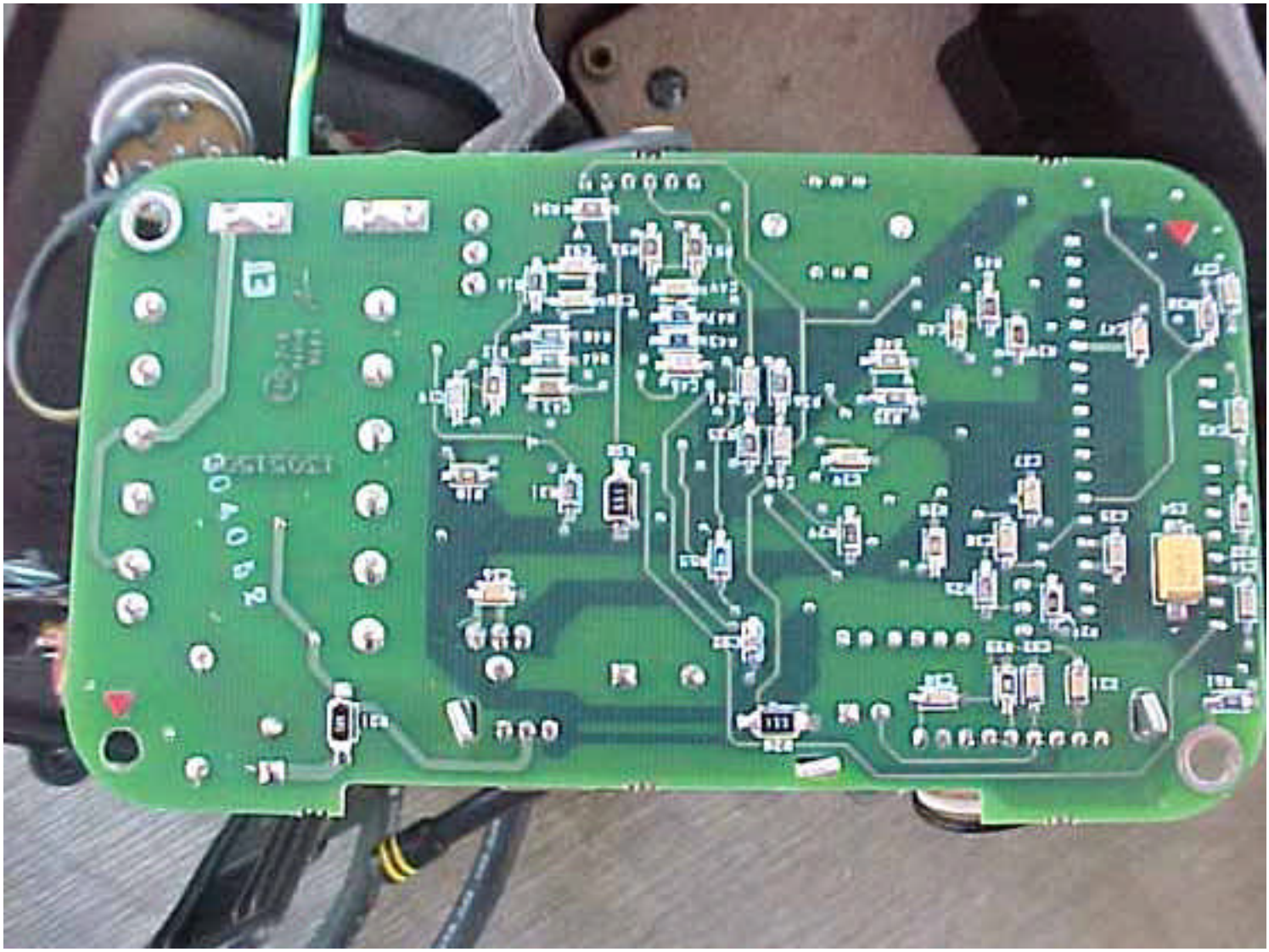
C7
R57
000
IC2