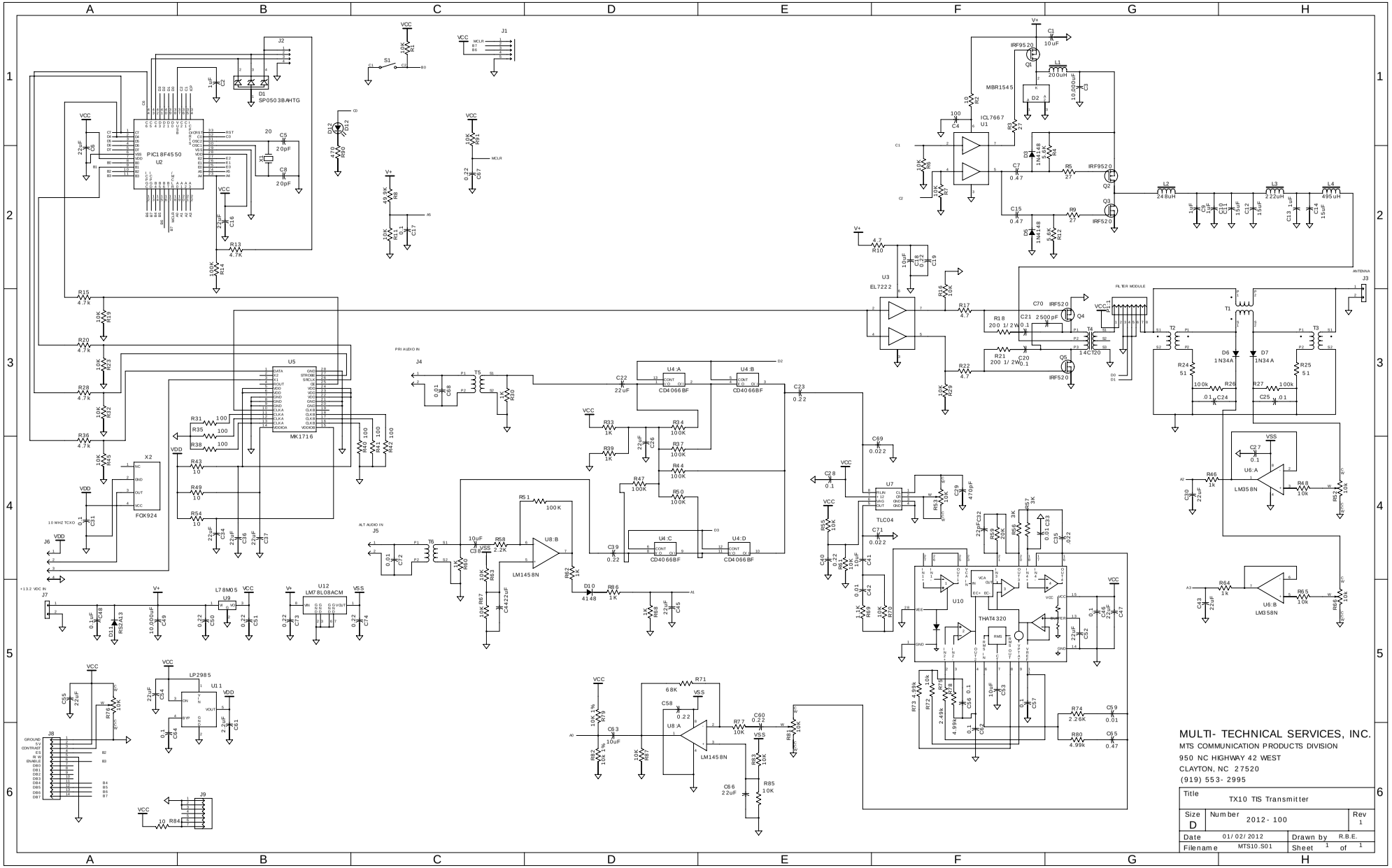
MULTI- TECHNICAL SERVICES, INC.
MTS COMMUNICATION PRODUCTS DIVISION
950 NC HIGHWAY 42 WEST
CLAYTON, NC 27520
(919) 553- 2995
Title TX10 TIS Transmitter
Size D
Number 2012- 100
Rev 1
Date 01/02/2012
Drawn by R.B.E.
Filename MTS10.S01
Sheet 1 of 1
PIC18F4550
MK1716
FOX924
EL7222
ICL7667
IRF9520
IRF520
MBR1545
CD4066BF
TLC04
THAT4320
LM1458N
LM358N
LM78L08ACM
LM78L05
LP2985
SP0503BAHTG
FILTER MODULE
ANTENNA
PRI AUDIO IN
ALT AUDIO IN
+13.2 VDC IN
10 MHZ TCXO

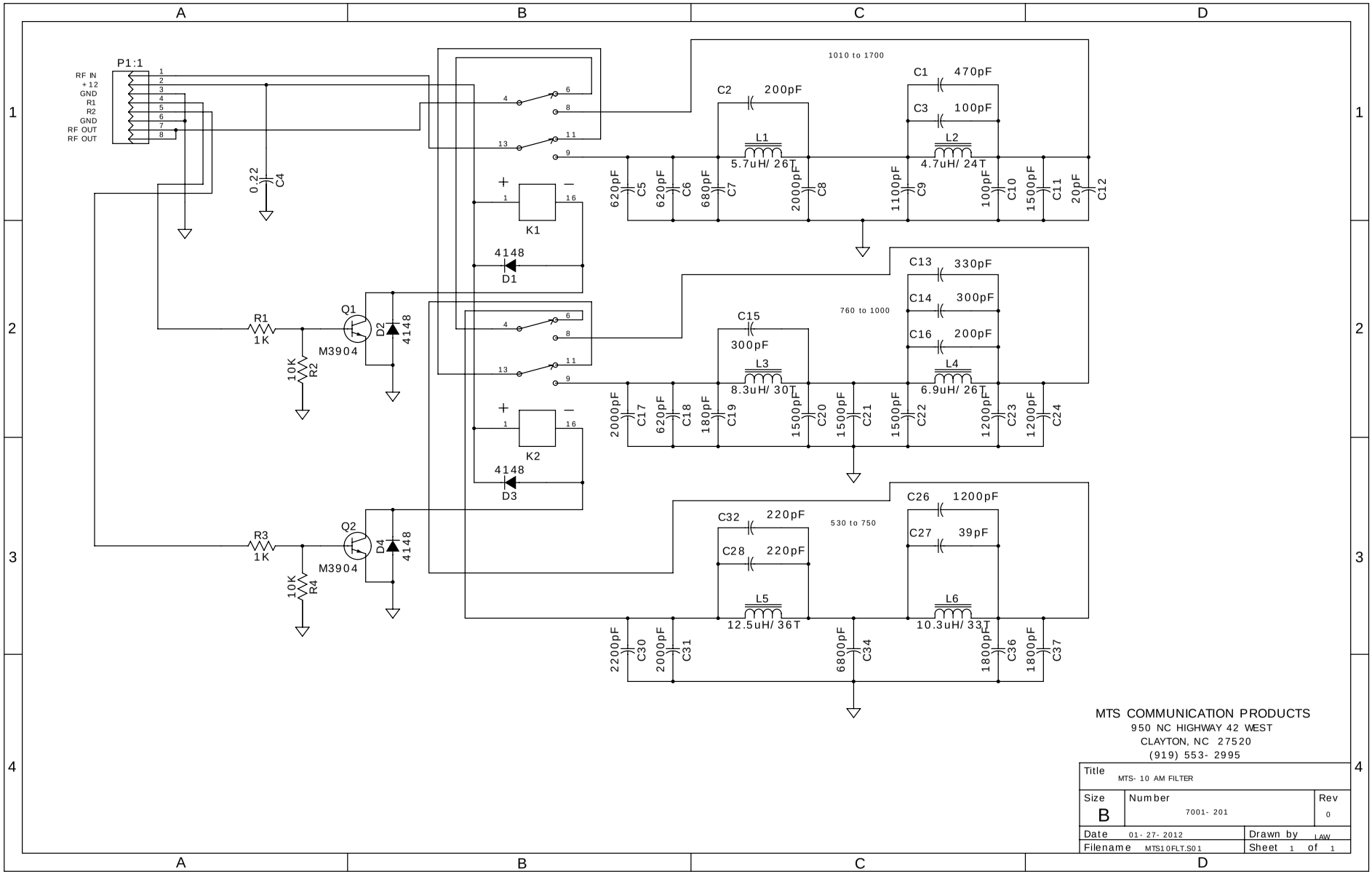

MTS COMMUNICATION PRODUCTS
950 NC HIGHWAY 42 WEST
CLAYTON, NC 27520
(919) 553- 2995

Title MTS- 10 AM FILTER		
Size B	Number 7001- 201	Rev 0
Date 01- 27- 2012	Drawn by LAW	
Filename MTS10FLT.S01	Sheet 1 of 1	