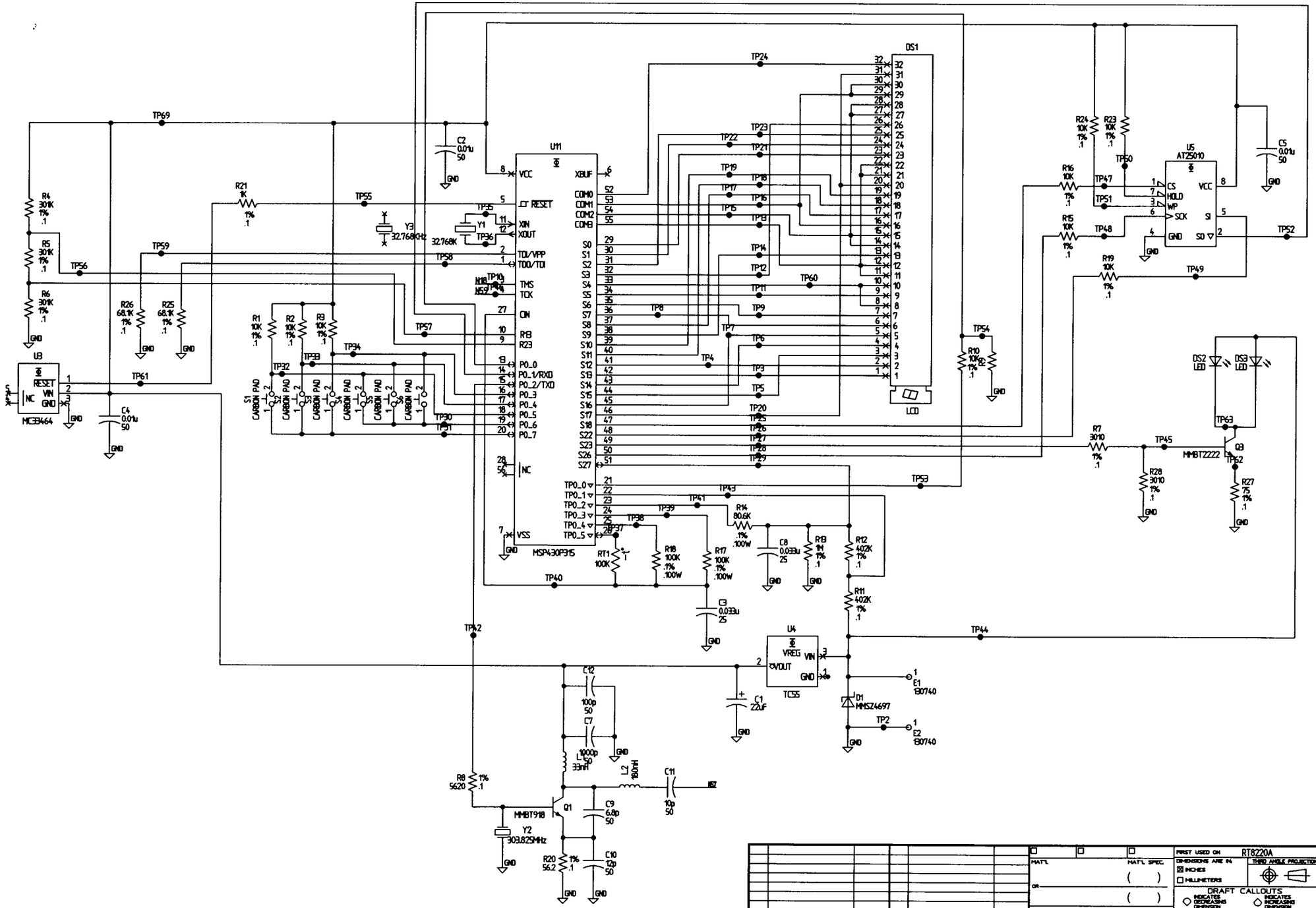

A	11-23-99	99-5448	

MAT'L
MAT'L SPEC
( )
OR
( )

FUNCTIONAL DIMENSIONING:
ALL DIMENSIONED AND UNDIMENSIONED GEOMETRY AND TOLERANCING ON THIS DRAWING IS DEFINED AND CONTROLLED BY THE DATABASE FILE KEY INFORMATION IS REPRESENTED BY THIS DRAWING CONTAINING FUNCTIONAL DIMENSIONS.

FIRST USED ON RT8220A

DIMENSIONS ARE IN
☒ INCHES
☐ MILLIMETERS

THIRD ANGLE PROJECTION

DRAFT CALLOUTS
INDICATES DECREASING DIMENSION
INDICATES INCREASING DIMENSION

-TOLERANCE UNLESS NOTED-

MACHINED ∠ ± 25' FORMED ∠ ± 1°

MILLIMETERS		INCHES
OVER	INCLUDING	
0 TO 6	±0.1	
6 TO 30	±0.2	.0 ±.02

DWN W.DAHNERS 11/03/99
DES P.ANDERSON
NEXT ASS'Y
OS CARD
REFERENCE

Honeywell
HOME AND BUILDING CONTROL
GOLDEN VALLEY, MN

NAME
CIRCUIT

DRAWING NO. 32004135 REV A

DEV. NO.