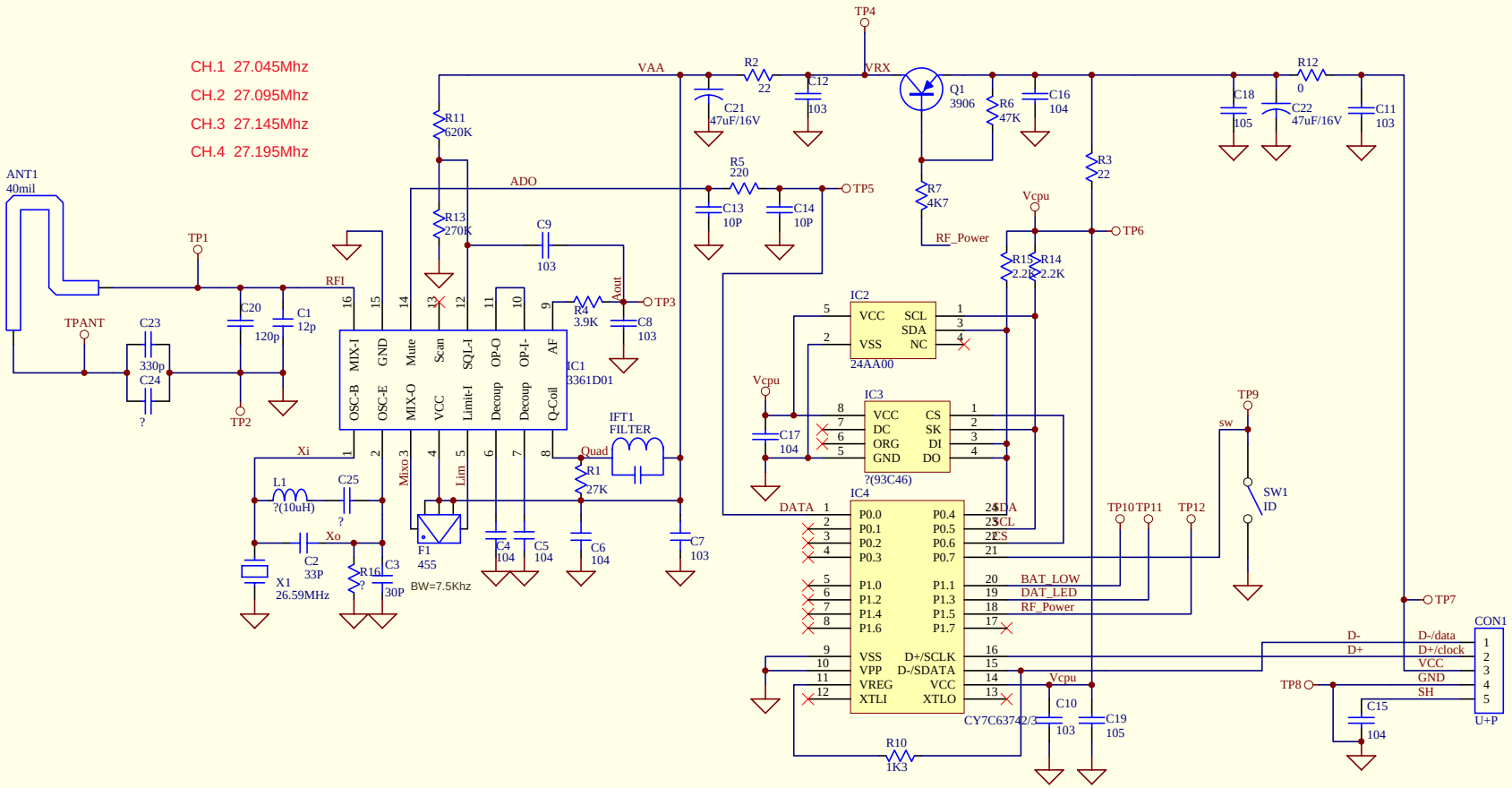

Title		
Size A4	Number	Revision
Date: 2-Jul-2002	Sheet of	
File: C:\WINDOWS\Desktop\新資料夾\Crystal.Prj	Drawn By: DDB	